Dell PowerSwitch Z9264F-ON Installation Guide

March 2022

March 2022
Rev. A09

DELL Technologies

Notes, cautions, and warnings

NOTE: A NOTE indicates important information that helps you make better use of your product.

CAUTION: A CAUTION indicates either potential damage to hardware or loss of data and tells you how to avoid the problem.

WARNING: A WARNING indicates a potential for property damage, personal injury, or death.

© 2017 - 2022 Dell Inc. or its subsidiaries. All rights reserved. Dell, EMC, and other trademarks are trademarks of Dell Inc. or its subsidiaries. Other trademarks may be trademarks of their respective owners.

Contents

Chapter 1: About this guide **5**
Related documents 5

Chapter 2: Z9264F-ON switch **6**
Introduction 6
Features 7
Physical dimensions 7
LED display 7
LED behavior 8
Prerequisites 10
Z9264F-ON switch configurations 10
Luggage tag 10

Chapter 3: Site preparations **12**
Site selection 12
Cabinet placement 12
Rack mounting 13
Switch ground 13
Fans and airflow 13
Power 13
Storing components 13

Chapter 4: NEBS compliance **15**
Important information 15
NEBS-compliant ground installation 15

Chapter 5: Z9264F-ON switch installation **18**
Ground lug assembly 18
Four-post rack assembly 20
Rack-mounted switch for shipment 20
Four-post rack mount 21
2RU front-rack installation 22
Optics installation 23
Optics removal 24
Switch start-up 24
After switch placement 24
Switch replacement 24

Chapter 6: Power supplies **26**
Components 26
AC or DC power supply installation 27
AC or DC power supply replacement 28
DC power supply to power source connection 29

Chapter 7: Fans **30**
Components 30
Fan module replacement 31

Chapter 8: Management ports **32**
Console port access 32
MicroUSB Type-B console port access 33
USB storage mount 33

Chapter 9: Before you install an OS **34**
ONIE service discovery 35

Chapter 10: Specifications **36**
Chassis physical design 36
IEEE standards 37
Agency compliance 37
USA Federal Communications Commission FCC statement 37
European Union EMC directive conformance statement 38
India 38
Japan VCCI compliance for class A equipment 39
Korean certification of compliance 39
China warning 40
Safety standards and compliance agency certifications 40
Electromagnetic compatibility 40
Product recycling and disposal 41

Chapter 11: Dell support **42**

1

About this guide

This guide provides site preparation recommendations, step-by-step procedures for rack mounting and desk mounting your switch, inserting modules, and connecting to a power source.

CAUTION: To avoid electrostatic discharge (ESD) damage, wear grounding wrist straps when handling this equipment.

NOTE: Only trained and qualified personnel can install this equipment. Read this guide before you install and power up this equipment. This equipment contains two power cords. Disconnect both power cords before servicing.

NOTE: This equipment contains optical transceivers, which comply with the limits of Class 1 laser radiation.



Figure 1. Class 1 laser product tag

NOTE: When no cable is connected, visible and invisible laser radiation may emit from the aperture of the optical transceiver ports. Avoid exposure to laser radiation. Do not stare into open apertures.

Regulatory

Marketing model Z9264F-ON is represented by the regulatory model E23W and the regulatory type E23W002.

Topics:

- Related documents

Related documents

For more information about the Z9264F-ON switch, see the following documents:

- *Dell SmartFabric User Guide*
- *Dell SmartFabric Release Notes*
- *Dell PowerSwitch Z9264F-ON Set-up Guide*
- *Dell PowerSwitch Z9264F-ON Release Notes*
- *Open Networking Hardware Diagnostic Guide*
- *Enterprise SONiC Distribution by Dell Technologies User Guide*
- *Release Notes for Enterprise SONiC Distribution by Dell Technologies*

NOTE: To access product documentation for specific Dell PowerSwitches, see the Dell Networking OS10 Info Hub. For all other resources, see Dell Support.

2

Z9264F-ON switch

The following sections describe the Dell EMC Z9264F-ON switch:

Topics:

- Introduction
- Features
- Physical dimensions
- LED display
- Prerequisites
- Z9264F-ON switch configurations
- Luggage tag

Introduction

The Z9264F-ON switch is a two rack unit (RU), full-featured, fixed form-factor top-of-rack (ToR) and end-of-row 1/10/25/40/50/100 GbE switch. In addition, the Z9264F-ON supports two SFP+ ports at 1/10 Mbps with 10 GbE multi-mode and single-mode options. The switch includes two hot-swappable AC or DC power supply units (PSUs) and four hot-swappable fan units.

For specific port profile details, see the *OS10 Enterprise Edition User Guide*.

The Z9264F-ON switch includes 64 QSFP28 ports. The QSFP28 ports support the following:

- 64 x 100G—native Q28
- 128 x 50G—via breakout
- 128 x 25G—via breakout
- 128 x 10G—via breakout
- 128 x 1G—via breakout
- 64 x 40G—native 40G and 128 x 40G via breakout

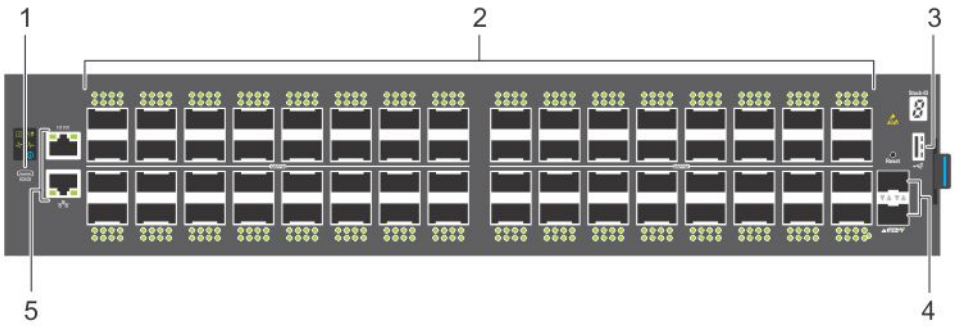

Figure 2. Z9264F-ON I/O-side view

1. MicroUSB type-B port
2. Sixty-four QSFP28 ports
3. USB type-A port
4. Two SFP+ ports
5. Top: RJ-45 Management port. Bottom: RJ-45 Console port

The Z9264F-ON switch has one RJ-45 serial console port, one MicroUSB type-B console port, one 10/100/1000 Base-T Ethernet management port, and one USB type-A port for the external storage. Management ports are located on the I/O-side of the switch.

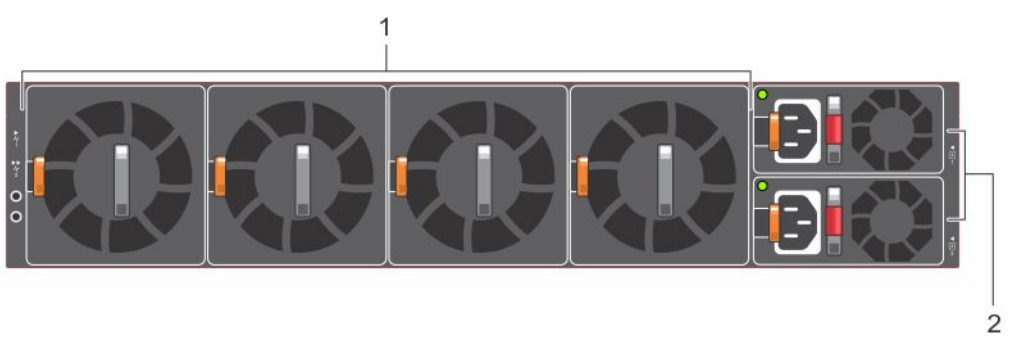

Figure 3. Z9264F-ON PSU-side view

1. Fan units
2. PSU units

Features

The Z9264F-ON switch offers the following features:

- Sixty-four QSFP28 ports that support 1, 10, 25, 40, 50, and 100 GbE
- Two SFP+ that support 1 and 10 GbE
- One MicroUSB type-B console port
- One RJ-45 serial console port
- One serial management USB type-A port for more file storage
- Denverton C3538 4-Core CPU system with 16 GB DDR4 memory and 32 GB SSD storage.
- One 10/100/1000BaseT Ethernet management port
- Two hot-swappable redundant power supplies
- Four hot-swappable fan modules
- Standard 2U switch

Physical dimensions

The Z9264F-ON switch have the following physical dimensions:

- 442 x 510 x 85.6 mm (W x D x H)
- 17.4 x 20.0 x 3.37 inches (W x D x H)
- PSU/fan tray handle: 1.38 inches (35 mm)

LED display

The Z9264F-ON switch includes LED displays on the I/O side of the switch. This section describes open networking installation environment (ONIE) LED behaviors. Some LED behaviors may change after you install your software.

LED behavior

The following Z9264F-ON switch LED behavior is seen during open networking installation environment (ONIE) operations:

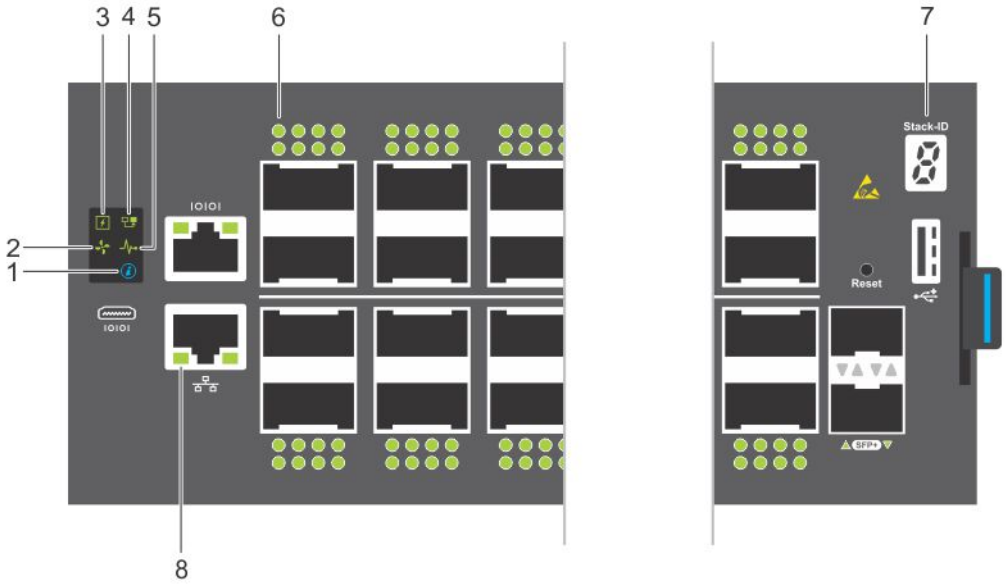

Figure 4. Z9264F-ON LEDs

1. Locator LED
2. Fan LED
3. Power LED
4. Primary LED
5. System LED
6. Port activity LED
7. Stack ID LED
8. Top: RJ-45 Ethernet Console Port LED. Bottom: RJ-45 Ethernet Management Port LED: Left is link; right is activity

Table 1. Z9264F-ON switch LED behavior

LED	Description
System Status/Health LED	• Solid green—Normal operation • Flashing green—Booting • Solid yellow (amber)—Critical system error • Flashing yellow—Noncritical system error, fan failure, or power supply failure
Power LED	• Off—No power • Solid Green—Normal operation • Solid yellow—POST is in process • Flashing yellow—Power supply failed
Primary LED	• Off—Switch is in Stacking Secondary mode • Solid green—Switch is in Stacking Primary or Standalone mode
FAN LED	• Off—No power • Solid green—Normal operation; fan powered and running at the expected RPM • Solid yellow—Fan failed—including incompatible airflow direction when you insert the PSU or fan trays with differing airflows
PSU LED	• Off—No power • Solid green—Normal operation • Solid yellow—Power supply critical event causing a shutdown

Table 1. Z9264F-ON switch LED behavior (continued)

LED	Description
	• Flashing yellow—PSU warning event; power continues to operate • Flashing green, 1.0Hz—Standby mode • Flashing green, 0.5Hz—AC power cord unplugged
LOCATOR LED/System Beacon	• Off—Locator function disabled • Flashing blue—Locator function enabled
7-Segment LED for stacking	• Off—No power • Solid green—Hex digit representing the stack unit ID
RJ-45 Ethernet Port LED	• Off—no Ethernet activity detected • Solid green—Ethernet activity detected

Table 2. System management Ethernet port LEDs

LED	Description
Link LED	• Off—No link • Solid green—Link operating at a maximum speed, autonegotiated/forced or 1G • Solid yellow—Link operating at a lower speed, autonegotiated/forced or 10/100M
Activity LED	• Off—No link • Flashing green—Port activity

NOTE: There are four LEDs for each SFP+ and QSFP28 port. For each port, 100GbE or 40GbE uses only one LED, 2x50GbE uses two LEDs, and 4x25GbE or 4x10GbE uses all four LEDs.

Table 3. SFP+ port LEDs

LED	Description
Link LED	• Off—No link • Solid green—Link operating at maximum speed, 10G • Solid yellow—Link operating at a lower speed,1G • Flashing yellow, 1 second on/off—port beacon
Activity LED	• Off—No link • Flashing green—port activity

Table 4. QSFP28 port LEDs

LED	Description
Link/Activity LED—100G, 40G, or 10G	• Off—No link • Solid green—Link operating at maximum speed, 100G for QSFP28 port • Flashing green—Port activity operating at maximum speed, 100G for QSFP28 ports • Solid yellow—Port activity operating at a lower speed, 40G or 10G port • Flashing yellow, 1 second on/off—Port beacon
Link/Activity LED—4x25G mode or 4x10G mode	• Off—No link • Solid green—Link operating at maximum speed, 4x25G port • Flashing green—Link activity operating at maximum speed, 4x25G port • Solid yellow—Link operating at a lowr speed, 4x10G port

Table 4. QSFP28 port LEDs (continued)

LED	Description
	• Flashing yellow, 1 second on/off—Port beacon
Link/Activity LED—2x50G mode	• Off—No link • Solid yellow—Link operating at a lower speed, 2x50G port • Flashing yellow—Port activity at a lower speed, 2x50G port • Flashing yellow, 1 second on/off—Port beacon

Prerequisites

The following is a list of components that are required and optional for successful switch installation:

NOTE: For detailed installation instructions, see Site preparations and Z9264F-ON switch installation.

- Z9264F-ON switch or multiple switches, if stacking
- AC or DC country- and regional-specific cables to connect the AC or DC power source to each of the AC or DC power supplies
- Rail mounting brackets for rack installation, included
- M4 screws for rack installation
- #1 and #2 Phillips screwdrivers, not included
- Torx screwdriver, not included
- Ground cable screws for L-bracket, included
- Copper/fiber cables

Other optional components are:

- M4 ground cable screw
- Extra power supply unit
- Extra fan module

NOTE: The DC ground lug kit ships with the other accessories inside the shipping box.

Z9264F-ON switch configurations

You can order the Z9264F-ON switch in several different configurations.

- Z9264F-ON AC or DC Normal Airflow—sixty-four 1/10/25/40/50/100 GbE ports, two SFP+ 1/10 ports, two AC or DC power supply and four fan subsystems with airflow from the I/O side to the power supply side
- Z9264F-ON AC or DC Reverse Airflow—sixty-four 1/10/25/40/50/100 GbE ports, two SFP+ 1/10 ports, two AC or DC power supply and four fan subsystems with airflow from the power supply side to the I/O side
- Fan with airflow from the I/O side to the PSU side—normal airflow
- Fan with airflow from the PSU side to the I/O side—reverse airflow
- AC or DC power supply with airflow from the I/O side to the PSU side—normal airflow
- AC or DC power supply with airflow from the PSU side to the I/O side—reverse airflow

Luggage tag

The switch has a pull-out tag, known as a luggage tag, on the I/O-side of the switch. The front of the luggage tag includes switch ID information. The back of the luggage tag includes a QRL that takes you to a How-To site where you can watch videos about racking the switch, replacing components, configuring port channels, and so on.

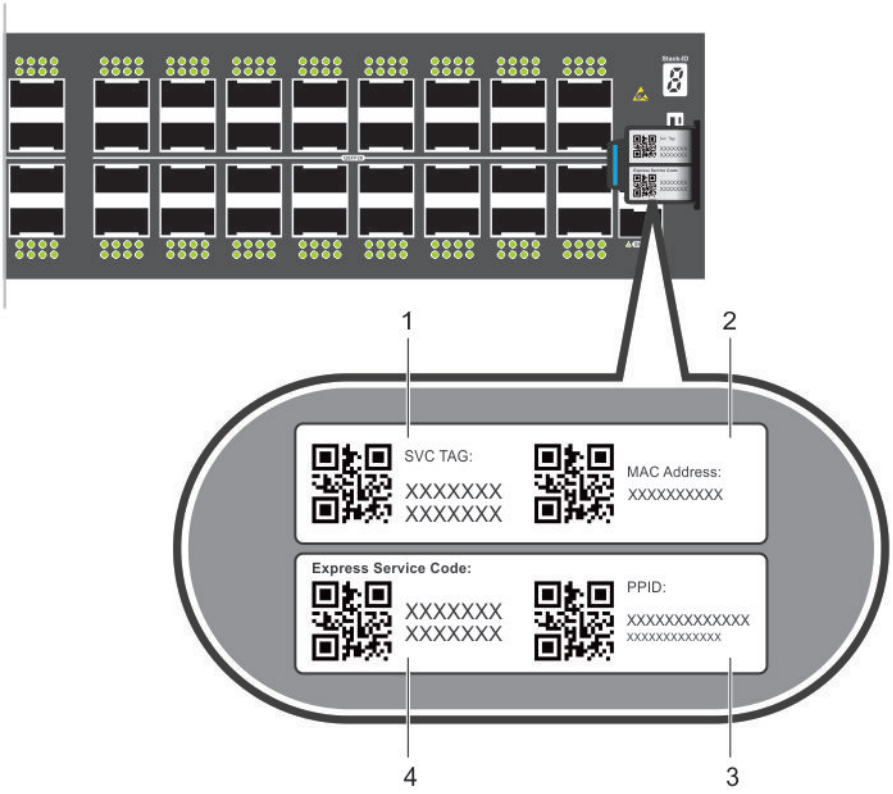

Figure 5. Z9264F-ON luggage tag

1. SVC Tag
2. MAC Address
3. PPID
4. Express Service Code

3

Site preparations

The Z9264F-ON switch is suitable for installation as part of a common bond network (CBN).

You can install the switch in:

- Network telecommunication facilities
- Data centers
- Other locations where the National Electric Code (NEC) applies

For more information about switch specifications, see Specifications.

NOTE: Install the switch into a rack or cabinet before installing any additional components such as cables or optics.

Topics:

- Site selection
- Cabinet placement
- Rack mounting
- Switch ground
- Fans and airflow
- Power
- Storing components

Site selection

Install the switch equipment in restricted access areas.

A restricted access area is one in which service personnel can only gain access using a special tool, lock, key or other means of security. The authority responsible for the location controls access to the restricted area.

Ensure that the area where you install your switch meets the following safety requirements:

- Near an adequate power source. Connect the switch to the appropriate branch circuit protection according to your local electrical codes.
- Switch environmental temperature range is from 0°C to 45°C (32°F to 113°F).
- Relative humidity is from 5 to 90 percent non-condensing.
- In a dry, clean, well-ventilated, and temperature-controlled room, away from heat sources such as hot air vents or direct sunlight.
- Away from sources of severe electromagnetic noise.
- Inside the restricted access area, positioned in a rack or cabinet, or on a desktop with adequate space in the front, back, and sides for proper ventilation and access.
- Install the switch in Information Technology Rooms in accordance with Article 645 of the National Electrical Code and NFPA 75.

For more information about switch storage and environmental temperatures, see Specifications.

Cabinet placement

Install the Z9264F-ON switch only in indoor cabinets designed for use in a controlled environment.

Do not install the switch in outside cabinets. For cabinet placement requirements, see Site selection.

The cabinet must meet minimum size requirements. Airflow must be in accordance with the Electronic Industries Alliance (EIA) standard. Ensure that there is a minimum of 5 inches (12.7 cm) between the intake and exhaust vents and the cabinet wall.

Rack mounting

When you prepare your equipment rack, ensure that the rack is grounded.

Ground the equipment rack to the same ground point the power service in your area uses. The ground path must be permanent.

Switch ground

Dell Technologies recommends grounding your switch. Use the Z9264F-ON switch in a CBN.

For more information, see Ground lug assembly.

Fans and airflow

The Z9264F-ON switch fans support two airflow options: normal and reverse.

Fan combinations

Fan installation is done as part of the factory install based on stock keeping unit (SKU) type. The Z9264F-ON switch has SKUs that support the following configurations:

- AC or DC PSU with fan airflow from the I/O to the PSU—the red indicator is the normal airflow direction
- AC or DC PSU with fan airflow from the PSU to the I/O—the blue indicator is the reverse airflow direction

Order the fans suitable to support your site's ventilation. Use a single type of airflow fan in your switch. Do not mix reverse and normal airflows in a single switch.

For proper ventilation, position the switch in an equipment rack or cabinet with a minimum of 5 inches (12.7 cm) of clearance around the exhaust vents. When you install two Z9264F-ON switches near each other, to permit proper airflow, position the two switches at least 5 inches (12.7 cm) apart. The fan speed varies based on internal temperature monitoring. The Z9264F-ON switch never intentionally turns off the fans.

For more information, see Fans.

Power

Connect the switch to the applicable power source using the appropriate power cable. An AC power cable is included with each PSU.

When installing AC or DC switches, follow the requirements of the National Electrical Code, ANSI/NFPA 70, where applicable.

The switch is powered-up when you connect the power cable between the switch and the power source. For more information, see Power supplies.

CAUTION: Always disconnect the power cable before you service the power supply slots. The switch has multiple power cables. Before servicing, ensure that all power cables are disconnected.

CAUTION: On an AC switch, use the power supply cable as the main disconnect device. Ensure that the socket-outlet is located and installed near the equipment and is accessible.

NOTE: The software controls the module power. You do not see module LEDs when the switch powers up in ONIE.

Storing components

If you do not install your Z9264F-ON switch and components immediately, properly store the switch and all optional components using these guidelines:

- Storage location temperature must remain constant. The storage range is from -40°C to 70°C (-40° to 158°F).

- Store on a dry surface or floor, away from direct sunlight, heat, and air conditioning ducts.
- Store in a dust-free environment.

NOTE: ESD damage can occur when components are mishandled. Always wear an ESD-preventive wrist or heel ground strap when handling the Z9264F-ON switch and accessories. After you remove the original packaging, place the Z9264F-ON switch and components on an anti-static surface.

4

NEBS compliance

For your switch to be network equipment building system (NEBS) compliant, follow the instructions detailed in this section.

To be NEBs compliant, orient your switch in the rack so that the air inlet is from the front aisle and the air exhaust is to the rear aisle.

Topics:

- Important information
- NEBS-compliant ground installation

Important information

WARNING: The SFP+, QSFP28, console, Ethernet management, and universal serial bus (USB) ports are suitable for connection to intra-building or unexposed wiring or cabling only. You MUST NOT metallically connect the ports to interfaces that connect to the out side plant (OSP) or its wiring. Use these interfaces as intrabuilding interfaces only (Type 2 or Type 4 ports as described in GR-1089-CORE, Issue 6) and they require isolation from the exposed OSP cabling. Adding primary protectors is not sufficient protection to connect these interfaces metallically to OSP wiring.

WARNING: If you install and connect the Z9264F-ON switch to a commercial AC power source, connect the switch to an external special protection device (SPD).

To be NEBS compliant:

- Locate your switch in a restricted-access area were only trained personnel are allowed access.
- Install and connect your switch to the common bonding network (CBN).
- You can also install and connect your switch to the central office.
- Connect the battery returns of your switch as DC-I.
- Ground your switch using a copper ground conductor.
- Clean and coat all bare grounding connection points on your switch with an antioxidant solution before making connections.
- Bring all unplated ground connection surfaces on your switch to a bright finish and treat them with an antioxidant solution before making connections.
- To ensure electrical continuity, remove any nonconductive surfaces on your switch from the ground connection points and threaded holes that secure the ground lugs.
- Use the two-hole, Listed, compression-type lug with an AWG 14 gauge wire for switch grounding.

NOTE: The Z9264F-ON switch can operate at -40.5 VDC to -60 VDC at a maximum current level of 24A.

NOTE: The Z9264F-ON switch is Earthquake Z4-compliant when you attach the rack rails to the four-post frame using threaded hardware. Do not use the tool-less or two-post installation methods.

NEBS-compliant ground installation

Before you install the switch into a rack, install the ground (GND) lug assembly.

The switch includes two installed M4 screws on the lower-left side of your switch. The DC switch also includes an assembled UL-certified GND lug with bracket, packaged separately. The AC switch does not include the UL-certified GND lug with bracket. If any parts are missing, contact your Dell EMC Sales Representative.

CAUTION: Grounding conductors *must* be made of copper. Do not use aluminum conductors.

NOTE: Coat the ground lug assembly with an anti-oxidant compound before crimping. Also, bring any unplated mating surfaces to a clean finish and coat with an anti-oxidant before mating. Plated mating surfaces must be clean and free from contamination.

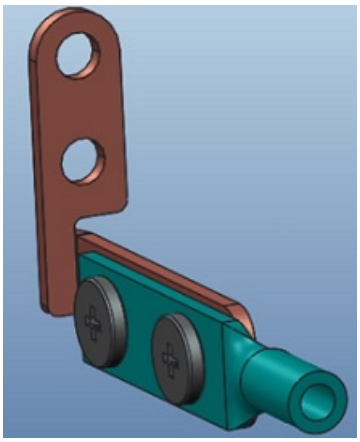

Figure 6. Ground lug assembly

1. Remove the two installed M4 screws from the lower-left side of your switch.

   NOTE: Keep these screws.

2. Remove the bracket assembly from the shipping bag.
3. Measure and cut a length of ground wire sufficient to reach between the system-installed ground lug assembly and your rack ground point.
4. Crimp the ground cable to the ground lug assembly.
   a. Coat the bare end of the wire with an antioxidant compound.
   b. Insert the end of the wire into the ground lug.
   c. Crimp the ground lug end.
5. Clean the bracket and lug surfaces thoroughly and apply an anti-oxidant solution to the mating surfaces.
6. Attach the switch ground lug assembly to the switch.

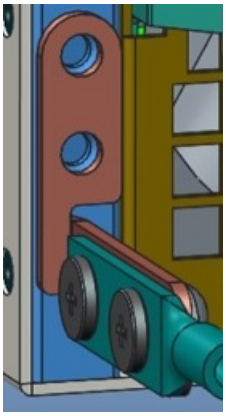

Figure 7. Attaching the ground lug assembly

7. Using the two removed screws, attach the GND lug bracket assembly to your switch, as shown.
   Torque the M4 screws to ±8-10 in-lbs.

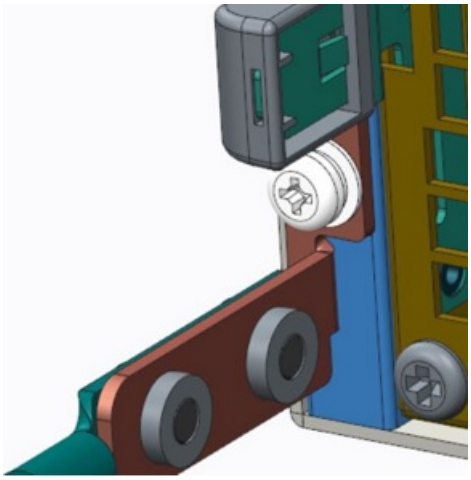

Figure 8. Ground lug assembly attached

8. Attach the other end of the ground wire to your rack ground point.
9. Install your switch into your rack using the Z9264F-ON switch installation.

5

Z9264F-ON switch installation

To install the Z9264F-ON switch, complete the installation procedures in the order presented in this chapter.

Always handle the switch and components with care. Avoid dropping the switch or its field replaceable units (FRUs).

NOTE: ESD damage can occur if components are mishandled. Always wear an ESD-preventive wrist or heel ground strap when handling the Z9264F-ON switch and components. As with all electrical devices of this type, take all the necessary safety precautions to prevent injury when installing this switch.

Topics:

- Ground lug assembly
- Four-post rack assembly
- Four-post rack mount
- 2RU front-rack installation
- Optics installation
- Switch start-up
- After switch placement
- Switch replacement

Ground lug assembly

Before you install the switch into a rack, install the ground (GND) lug assembly.

NOTE: For AC-powered switches, although the third conductor of the AC power cable provides a ground path, Dell Technologies recommends grounding your switch with a dedicated ground wire. You can order an AC ground lug separately.

NOTE: For a DC-powered switch, the only way to safely ground your switch is to attach a dedicated ground wire. The ground lug kit ships in a plastic bag that is placed with the other accessories inside the shipping box. The ground lug bracket screws ship attached to the switch. Before you install the DC switch in the dual-tray, attach the ground lug and bracket to the switch using the included screws and then attach the DC ground wire to the ground lug.

The switch includes two installed M4 screws on the lower-left side of your switch. The DC switch also includes an assembled UL-certified GND lug with bracket, which is packaged separately. The AC switch does not include the UL-certified GND lug. If any parts are missing, contact your Dell EMC sales representative.

The ground cable is not included. To properly ground the switch, Dell Technologies recommends a one- or two-hole lug, M4 hole size. The grounding lugs must be a UL-recognized, crimp-type lug.

CAUTION: Grounding conductors *must* be made of copper. Do not use aluminum conductors.

NOTE: Coat the ground lug assembly with an antioxidant compound before crimping. Also, bring any unplated mating surfaces to a clean finish and coat with an antioxidant before mating. Plated mating surfaces must be clean and free from contamination.

1. Remove the two installed M4 screws from the lower-left side of your switch.

   NOTE: Keep these screws.

2. Remove the bracket assembly from the shipping bag.

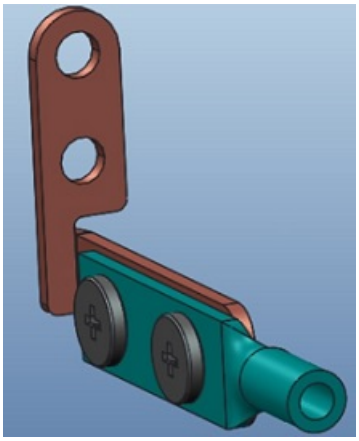

Figure 9. Ground lug assembly

3. Measure and cut a length of ground wire sufficient to reach between the system-installed ground lug assembly and your rack ground point.
4. Crimp the ground cable to the ground lug assembly.
   a. Coat the bare end of the wire with an antioxidant compound.
   b. Insert the end of the wire into the ground lug.
   c. Crimp the ground lug end.
5. Clean the bracket and lug surfaces thoroughly, and apply an antioxidant solution to the mating surfaces.
6. Attach the switch ground lug assembly to the switch.



Figure 10. Ground lug assembly attached

7. Attach the GND lug bracket assembly to your switch using the two removed screws, as shown.
   Torque the M4 screws to ±8–10 in-lbs.

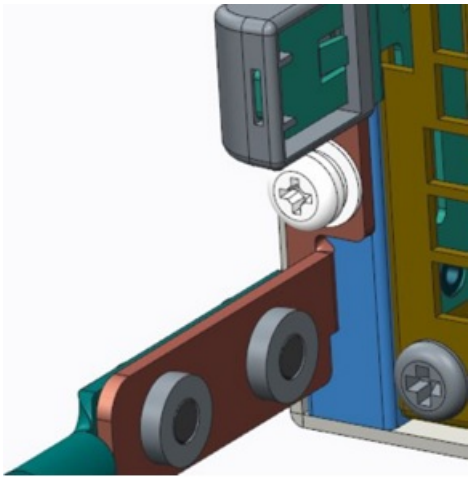

Figure 11. Ground lug assembly attached

8. Attach the other end of the ground wire to your rack ground point.
9. Install your switch into your rack using the Z9264F-ON installation instructions.

Four-post rack assembly

Due to the chassis weight, the Z9264F-ON switch does not support a two-post rack installation; you must install the switch in a four-post rack.

To install in a four-post rack, follow the instructions in your rack frame kit. In a four-post rack, the maximum distance between the front and back vertical posts is 36 inches (91.44 cm); the minimum distance is 24 inches (60.96 cm).

Rack-mounted switch for shipment

Before you install the Z9264F-ON switch in a rack **that you intend to ship**, you must first remove the tool-less feature from each end of both Dell rack rails.

CAUTION: Use two people, an equipment lift, or pallet jack when lifting or moving the chassis. Install the chassis into the rack before inserting the chassis components. Lift the chassis only from the bottom. Lifting by the chassis shelves or power supply openings might damage the chassis.

NOTE: For more installation instructions, see the installation labels attached to the rail assembly.

You will need eight user-supplied rack rail screws to complete this procedure.

To install a switch in a rack that you intend to ship:

1. Separate each rail assembly by sliding the inside rail out of the outside rail.
2. Unscrew the tool-less feature pins from each end of both rack rails.

   Use a standard slotted screw driver to remove the tool-less feature pins.

   In this illustration, the tool-less feature pins are on the right side of the rail and the tool-less feature is on the left side of the rail.

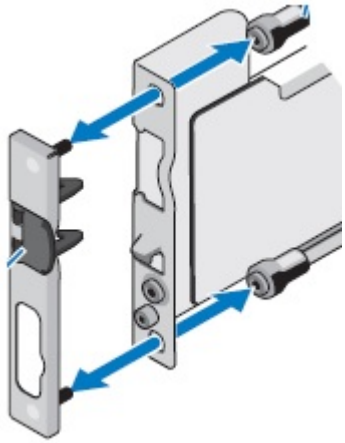

Figure 12. Remove tool-less feature

3. Pull on the tool-less features to remove them from the rack rails.
4. Mount the rack rails directly to the front and back of the rack using two screws and clip nuts at the four mounting points.
5. Attach the inner switch rails to the switch.

   Line up the rail with the mounting heads and attach the rail to the switch. For more information, see2RU front-rack installation.
6. Align the switch rails with the rack rails and slide the switch into the rack until it is flush with the front of the rack.
7. Tighten the screws on the rails to secure the switch in the rack, if needed.

To install the switch in a rack you do not intend to ship, see Four-post rack mount.

Four-post rack mount

Rack mounting safety considerations.

CAUTION: To prevent bodily injury when mounting or servicing this unit in a rack, take special precautions to ensure that the system remains stable. The following guidelines are provided to ensure your safety:

- **If your chassis is the only unit in the rack, mount it at the bottom of the rack.**
- **When mounting this unit in a partially filled rack, load the rack from the bottom to the top with the heaviest component at the bottom of the rack.**
- **If the rack comes with stabilizing devices, install the stabilizers before mounting or servicing the unit in the rack.**
- **If the chassis ships with blanks, remove the blanks from each slot before lifting the chassis.**

NOTE: These instructions are a condensed reference. Read the safety instructions in your *Safety, Environmental, and Regulatory* information booklet before you begin.

NOTE: The illustrations in this document are not intended to represent a specific switch.

Rack mount safety considerations

- Rack loading—Overloading or uneven loading of racks may result in shelf or rack failure, possibly damaging the equipment and causing personal injury. Stabilize racks in a permanent location before loading begins. Mount the components starting at the bottom of the rack, then work to the top. Do not exceed the load rating for your rack.
- Power considerations—Connect only to the power source specified on the unit. When you install multiple electrical components in a rack, ensure that the total component power ratings do not exceed the circuit capabilities. Overloaded power sources and extension cables present fire and shock hazards.
- Elevated ambient temperature—If you install the switch in a closed rack assembly, the operating temperature of the rack environment may be greater than the room ambient temperature. Use care not to exceed the 45°C (113°F) maximum ambient temperature of the switch.
- Reduced airflow—Do not compromise the amount of airflow that is required for safe operation of the equipment. Install the equipment in the rack so that the equipment constantly has the correct amount of airflow surrounding it.

- Reliable earthing—Maintain reliable earthing of rack-mounted equipment. Pay particular attention to the supply connections other than the direct connections to the branch circuit, for example: use of power strips.
- Do not mount the equipment with the fan panel facing in the downward position.

Switch installation and removal

1. Align the system with the rails, and slide the system into the rack.
2. Tighten the screws on each side of the front panel, items 1 and 2.

To remove the system from the rack, loosen the screws and slide the system out of the rack.

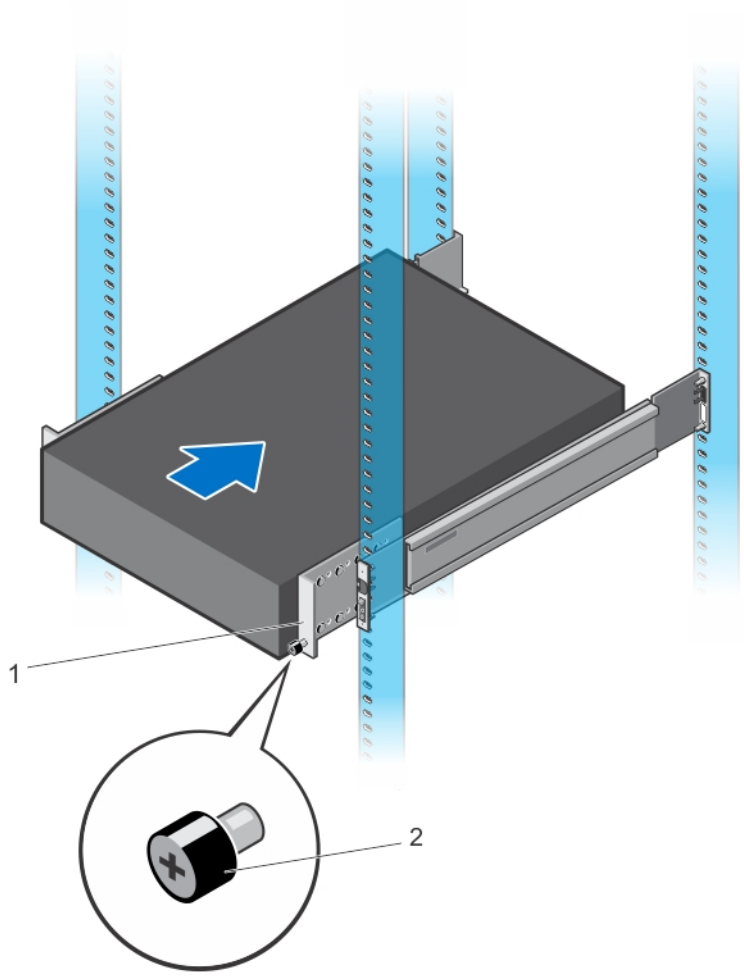

Figure 13. Z9264F-ON installation

1. Extra screws to restrict front-back movement of the switch.
2. Main screw

2RU front-rack installation

Configure the rails that are attached to the switch.

NOTE: For more instructions, see the installation instruction labels on the rail.

1. Attach the inner switch rails to the Z9264F-ON switch.

   Line up the rail with the mounting heads and attach the rail to the switch.

   Slide the rail back until it locks into place.
2. Line up both switch rails to the previously mounted rack rails and slide the switch in until it is flush with front of rack.

   To keep the switch from inadvertently sliding out of the rack and falling, about 3 inches before you fully insert your switch, the rail locking feature engages.

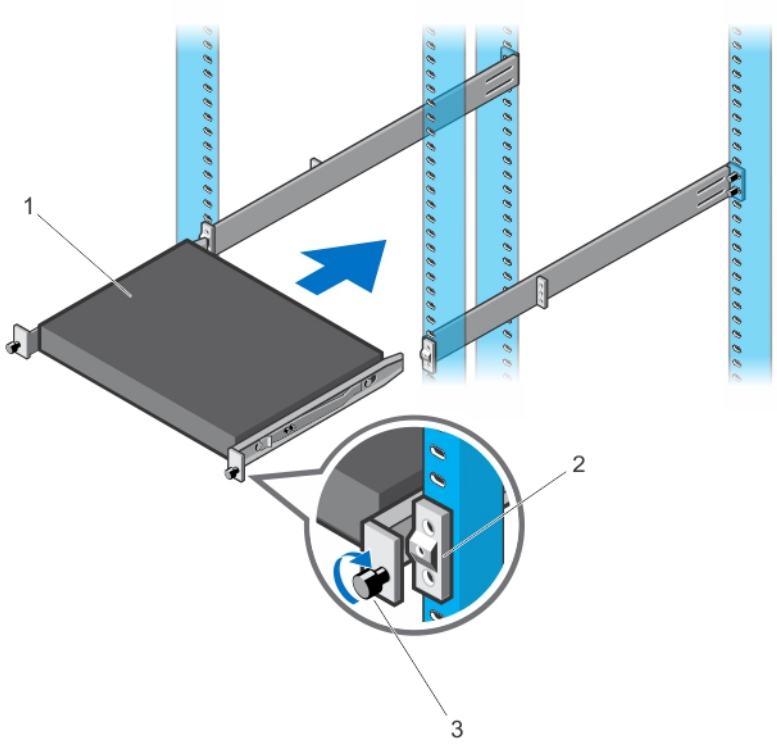

Figure 14. Front rack installation

NOTE: Do not the use the mounted rack rails as a shelf or a workplace.

3. Tighten the two thumbscrews and rack screws.

To remove the switch from the rack or cabinet, press in the two side-release bars on the switch simultaneously and slide the switch forward.

Optics installation

The Z9264F-ON switch has QSFP28 and SFP+ optical ports.

For a list of supported optics, see the specification sheets at Dell Support or contact your Dell Sales representative.

CAUTION: ESD damage can occur if components are mishandled. Always wear an ESD-preventive wrist or heel ground strap when handling the Z9264F-ON switch and components.

WARNING: When working with optical fibers, follow all warning labels and always wear eye protection. Never look directly into the end of a terminated or unterminated fiber or connector as it may cause eye damage.

1. Position the optic to enter the port correctly.
   The optic has a key that prevents it from being inserted incorrectly.
2. Insert the optic into the port until it gently snaps into place.

   NOTE: When you cable the ports, be sure not to interfere with the airflow from the small vent holes above and below the ports.

Optics removal

Remove an optic by pushing the tab on the optic and sliding the optic from the port.

When removing optics with direct attach cables (DACs) from the port, pull the release tab firmly and steadily. Before pulling the release tab, you may need to gently push the optic into the port to ensure that it is seated properly. Do not jerk or tug repeatedly on the tab.

Switch start-up

Supply power to the Z9264F-ON switch after it is mounted in a rack or cabinet.

Dell Technologies recommends reinspecting your switch before starting it up. Verify the following:

- Optional: The equipment is properly secured to the rack and properly grounded.
- Optional: The equipment rack is properly mounted and grounded.
- The ambient temperature around the unit, which may be higher than the room temperature, is within the limits that are specified for the Z9264F-ON switch. For more information, see Specifications.
- There is sufficient airflow around the unit.
- The input circuits are correctly sized for the loads and that you use sufficient overcurrent protection devices.
- All protective covers are in place.

CAUTION: Do not start up the switch if you did not install a fan module.

NOTE: A US AC or DC power cable is included for powering up an AC or DC power supply. You must order all other power cables separately.

NOTE: ESD damage can occur if components are mishandled. Always wear an ESD-preventive wrist or heel ground strap when handling the Z9264F-ON switch and components.

Start up sequence

When the switch starts up, the fans immediately come on at high speed. The fan speed slows as the switch continues to boot.

After switch placement

After you have securely installed and powered on the Z9264F-ON switch:

- If you are using Dell software, see switch documentation at Dell Support.
- If you need ONIE information, see ONIE documentation at ONIE GitHub.
- If you are using third-party software, see your third-party documentation.

NOTE: If necessary, to upgrade your software or firmware images, go to the *Drivers and Downloads* page for your switch at Dell Support.

Switch replacement

The following steps describe removing and replacing a switch. For further assistance when replacing a switch, contact your Dell EMC support representative.

NOTE: ESD damage can occur when components are mishandled. Always wear an ESD-preventive wrist or heel ground strap when handling the switch and accessories. After you remove the original packaging, place the switch and components on an anti-static surface.

1. Back up the switch configuration to your back-up computer or laptop TFTP server.

   ```
   copy running-config tftp://hostip/filepath
   ```

   To establish a console connection to the switch CLI, assign an IP address on the switch network.

2. Disconnect the power source.
3. Label and remove all cables.
4. Remove the switch from the rack.

   At the same time, press in the two side-release bars on the switch and slide the switch forward.

   If you are using the fan trays or PSUs in the replacement switch, remove them from the switch.
5. Unpack the new switch.
6. Confirm that the software version of the replacement switch is the same as the previously installed switch.

   ```
   show os-version
   ```

   If the software versions do not match, upgrade the replacement switch software using the procedure included with the firmware download.
7. Copy the backed-up switch configuration to the new switch.

   ```
   copy tftp://hostip/filepath running-config
   ```
8. Install the new switch in your rack or cabinet.

   For detailed installation instructions, see the *Z9264F-ON switch installation* section.

   If you are using the fan trays or PSUs from the removed switch, reinsert them in the replacement switch.
9. Connect all the cables.
10. Power on the switch.

    For more information, see the *Switch power-up* section.

6

Power supplies

The Z9264F-ON switch ships with two AC or DC power supplies.

The two PSUs have two air-flow directions, normal and reverse. Normal is from the I/O-side to the PSU-side. Reverse is from the PSU-side to the I/O-side.

The PSUs are field replaceable. When running with full redundancy—two power supplies installed and running—you can remove and replace one PSU without disrupting traffic.

The DC PSUs are rated -48 to -60VDC, 32A minimum, Tma=45°C, and 500m altitude operation. The user-supplied power cable must be 10AWG, 32A minimum, with a 60V minimum rating.

CAUTION: To prevent electrical shock, ensure that the Z9264F-ON switch is grounded properly. If you do not ground your equipment correctly, excessive emissions may result. Use a qualified electrician to ensure that the power cables meet your local electrical requirements.

NOTE: Connect the power supply to the appropriate branch circuit protection as defined by your local electrical codes. Verify that the remote power source complies with the switch input power specifications.

NOTE: If you use a single PSU, install a blank plate in the other PSU slot. Use power supply 2 (PSU2) as the blank plate slot. To install the blank plate, use a #1 Philips screw driver.

NOTE: ESD damage can occur if components are mishandled. Always wear an ESD-preventive wrist or heel ground strap when handling the Z9264F-ON switch and components.

Topics:

- Components
- AC or DC power supply installation
- AC or DC power supply replacement
- DC power supply to power source connection

Components

The following power supply options are available for the Z9264F-ON switch:

- AC or DC power supply with integrated fan
- AC or DC power supply with integrated reverse flow fan

Power supply 1 (PSU1) is on the right-top side of the switch; power supply 2 (PSU2) is on the right-bottom side of the switch.

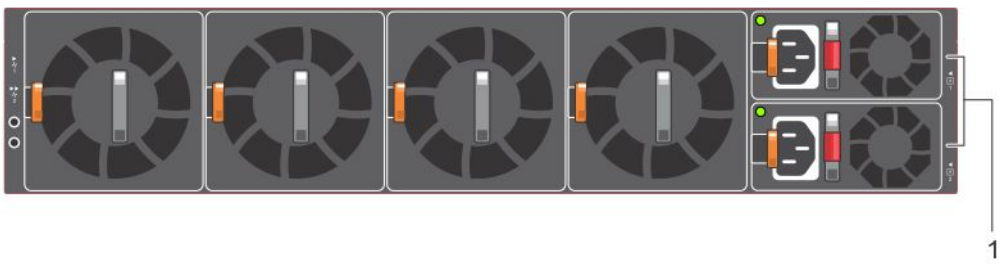

Figure 15. Z9264F-ON PSUs

- 1—PSUs

The PSUs have an integrated fan, which you cannot replace individually; if the fan integrated in a PSU fails, you must replace the entire PSU. You can replace the fan trays individually. For fan tray replacement procedures, see Fans.

WARNING: Prevent exposure and contact with hazardous voltages. Do not attempt to operate this switch with the safety cover removed.

CAUTION: Remove the power cable from the PSU before removing the PSU. Also, do not connect the power cable before you insert the PSU in the switch.

NOTE: To comply with the GR-1089 Lightning Criteria for Equipment Interfacing with AC or DC Power Ports, use an external surge protection device (SPD) at the AC or DC input of the router.

PSU LEDs

- Solid green—Input is OK.
- Flashing yellow (amber)—There is a fault with the PSU.
- Flashing green blink at 1Hz—Switch is in a standby/CR state.
- Off—PSU is off.

AC or DC power supply installation

NOTE: The PSU slides into the slot smoothly. Do not force a PSU into a slot as this action may damage the PSU or the switch.

NOTE: Ensure that you correctly install the PSU. When you install the PSU correctly, the power connector is on the left side of the PSU.

NOTE: If you use a single PSU, install a blank plate in the other PSU slot. If you are only using one power supply, install the power supply in the first slot, PSU1. Install a blank plate in the second slot, PSU2.

1. Remove the PSU slot cover from the Z9264F-ON switch using a small #1 Phillips screwdriver.
2. Remove the PSU from the electro-static bag.
3. Insert the PSU into the switch PSU slot—insert the exposed PSU connector first).

   The PSU slot is keyed so that you can only fully insert the PSU in one orientation. When you install the PSU correctly, it snaps into place and is flushed with the back of the switch.

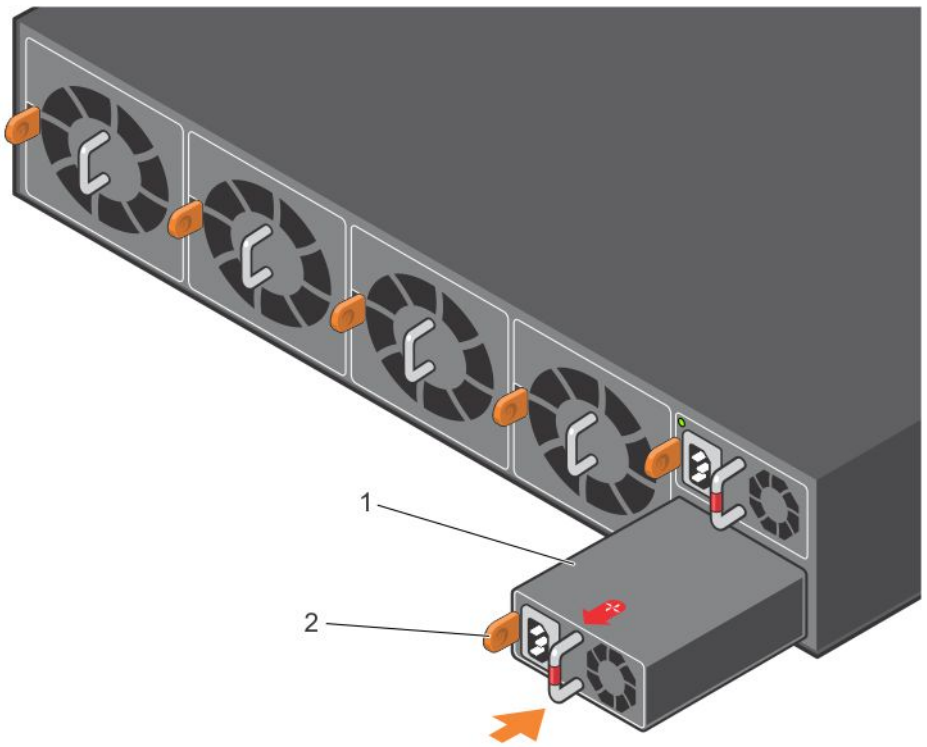

Figure 16. Z9264F-ON PSU installation

- 1—PSU
- 2—Orange release tab

4. Plug in the appropriate AC 3-prongs cable from the switch PSU to the external power source.
5. Repeat steps 1 through 4 if you have a redundant PSU using the second PSU slot on the Z9264F-ON switch.

NOTE: The Z9264F-ON switch powers up when you connect the cables between the power supply and the power source.

AC or DC power supply replacement

CAUTION: Disconnect the power cable before removing the power supplies. Also, disconnect all power cables before servicing.

NOTE: The PSU slides into the slot smoothly. Do not force a PSU into a slot as this action may damage the PSU or the Z9264F-ON switch.

NOTE: If a PSU fails, you must replace the entire unit. There are no field serviceable components in the PSU. To request a hardware replacement, see Dell EMC support.

NOTE: If you use a single PSU, install a blank plate in the other PSU slot. If you are only using one power supply, install the power supply in the first slot, PSU1. Install a blank plate in the second slot, PSU2.

1. Disconnect the power cable from the PSU.
2. Use the grab handle to slide the PSU out of the power supply bay.
3. Use the grab handle on the replacement PSU to slide it into the power supply bay.
4. Attach the power cable to the replacement PSU.

NOTE: The switch powers up when the cables are connected between the power supply and the power source.

DC power supply to power source connection

Each DC powered switch comes with a set containing a prewired, 3-inch 8 AWG, power supply connector and a four-screw wiring block. One set is provided for each DC PSU.

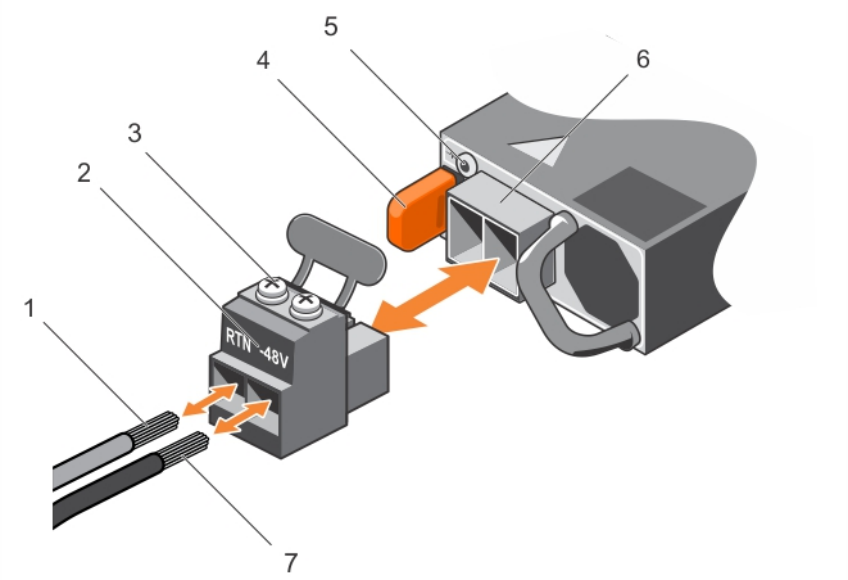

Figure 17. DC power connector and wiring block

1. DC wire RTN
2. DC power connector
3. Captive screws (2)
4. Orange tab
5. PSU status LED
6. DC power socket
7. DC wire –48V

1. Strip 0.5 inches of insulation from each of the power connector's wires, RTN and –48V.
2. Insert each of the power connector's bare wire lengths into the wiring block. Insert RTN into one hole and –48V into the other hole.
3. Use a flat-blade screwdriver to tighten the screws that secures the bare wires into the wiring block.
4. Secure the site's DC power source wires to the other side of the wiring block, see steps 1 and 3.

   WARNING: Do not cross the wires. In the wiring block, RTN aligns with RTN and –48V aligns with –48V.

5. Insert the DC power connector into the power socket of the DC PSU. Ensure that the connector pins firmly seat and you hear the click of the power connector's left and right levered clamps lock into place.

   WARNING: Never try to force the power connector into or out of the DC PSU power socket.

NOTE: To remove the power connector from a DC PSU, use the orange tab on the side of the connector. Doing so disengages the power connector's clamps. After engaging the orange tab, pull the power connector from the DC PSU socket.

7

Fans

The Z9264F-ON switch comes from the factory with two PSUs and four fan modules installed in the switch. The fan modules and the power supplies, which have integrated fans, are hot-swappable.

In addition to the power supply modules, you can order and install fan modules separately.

The Z9264F-ON switch supports two airflow direction options. Do not mix airflow types in a switch; you can use only a single airflow direction in a switch. If the airflow directions are mismatched, *you must correct the mismatched airflow direction*.

- Airflow is from the I/O panel to the PSU—the red indicator is the normal airflow direction.
- Airflow is from the PSU to the I/O panel—the blue indicator is the reverse airflow direction.

All fans and PSUs in a configuration must be in the same airflow direction.

Environmental factors can decrease the amount of time required between fan replacements. Check the environmental factors regularly. An increase in temperature and/or particulate matter in the air might affect performance—for example, new equipment installation).

CAUTION: Check the fans at six-month intervals and replace them as necessary. Regularly monitor the speeds of the fans to accurately determine replacement intervals.

Topics:

- Components
- Fan module replacement

Components

The following are the Z9264F-ON switch fan components:

- Z9264F-ON switch fan module
- Z9264F-ON switch fan module—reverse flow

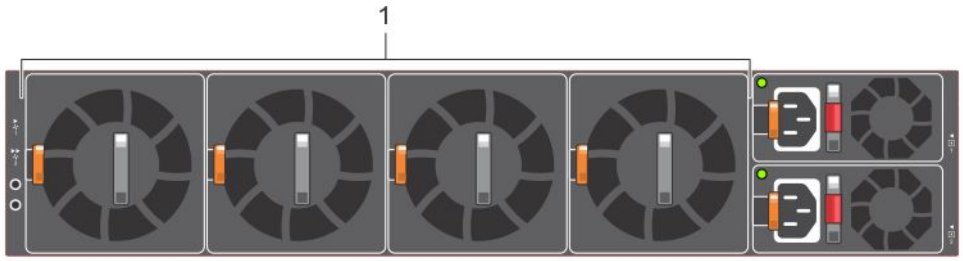

Figure 18. Z9264F-ON fan modules

- 1—Fan units

Fan LEDs

- Solid green—Fan function is normal.
- Flashing yellow (amber)—There is a fan fault.
- Off—Fan is off.

Fan module replacement

To request a hardware replacement, see Dell EMC support.

CAUTION: Complete the following steps within one minute or the switch temperature could rise above safe thresholds and the switch could shut down:

1. Slide the fan module out of the bay.
2. Slide the replacement module into the bay.

8

Management ports

Besides the 10/100/1000Base-T RJ-45 ports, the Z9264F-ON switch provides several ports for management and storage.

NOTE: The output examples in this section are for reference only. Your output may vary.

Topics:

- Console port access
- MicroUSB Type-B console port access
- USB storage mount

Console port access

The RJ45 console port is on the I/O-side of the Z9264F-ON switch.

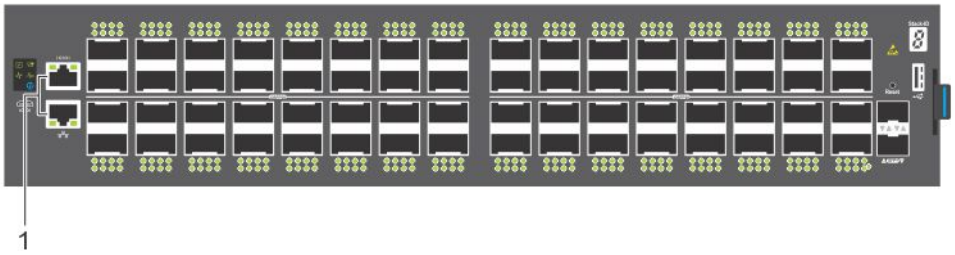

Figure 19. Z9264F-ON RJ45 console and management ports

- 1—RJ45 console port (top), RJ45management port (bottom)

CAUTION: Ensure that any equipment that is attached to the serial port can support the required 115200 baud rate.

NOTE: When connecting the RJ45 console to the patch panel or terminal server using Cat5e or Cat6 Ethernet cables, the maximum cable length is 100m. However, if the Ethernet cable is disconnected from the patch panel or terminal server but connected to the RJ45 console, the maximum cable length is 6m. If the cable is longer than 6m when disconnected from the panel or server, your switch may not boot.

NOTE: Before starting this procedure, ensure that your computer has a 9-pin serial port and that you have installed a terminal emulation program on your computer.

NOTE: If the serial port on your computer cannot accept a female DB-9 connector, use a DB-9 male-to-male adaptor.

1. Install the provided RJ-45 connector-side of the provided cable into the switch console port.
2. Install the DB-9 female-side of the provided copper cable into the serial port on your computer.
   Alternatively, install the DB-9 cable into other data terminal equipment (DTE) server hardware.
3. Keep the default terminal settings on the console as follows:
   - 115200 baud rate
   - No parity
   - Eight data bits
   - One stop bit
   - No flow control

MicroUSB Type-B console port access

The MicroUSB Type-B console port is on the I/O side of the switch.

NOTE: The Z9264F-ON switch uses the Silicon Labs CP2109 USB-B chip. To find the correct USB-B universal asynchronous receiver-transmitter (UART) driver, see Silabs.

When you connect the microUSB-B port, it becomes the primary connection and, while connected, all messages are sent to the microUSB-B port.

1. Power on the personal computer.
2. Connect the USB Type-A end of cable into an available USB port on the computer.
3. Connect the microUSB Type-B end of cable into the microUSB Type-B console port on the switch.
4. Power on the switch.
5. Install the necessary USB device drivers.
6. Open your terminal software emulation program to access the switch.
7. Confirm that the terminal settings on your terminal software emulation program are as follows:
   - 115200 baud rate
   - No parity
   - Eight data bits
   - One stop bit
   - No flow control

USB storage mount

USB storage does not automatically mount. USB storage supports the FAT file system. To use USB storage, first mount the device using the following steps:

1. Create a mount directory for the USB storage.
   ```
   ONIE:/ # mkdir /mnt/usb
   ```
2. View the fixed disks using the `fdisk` command.
   ```
   ONIE:/mnt # fdisk -l
   ```
   For internal storage:
   ```
   Disk /dev/sda: 15.8 GB, 15829303296 bytes
   255 heads, 63 sectors/track, 1924 cylinders
   Units = cylinders of 16065 * 512 = 8225280 bytes

      Device Boot      Start         End      Blocks  Id System
   /dev/sda1               1        1925    15458303+ ee EFI GPT
   ```
   For USB storage:
   ```
   Disk /dev/sdb: 30.9 GB, 30942946304 bytes
   64 heads, 32 sectors/track, 29509 cylinders
   Units = cylinders of 2048 * 512 = 1048576 bytes

      Device Boot      Start         End      Blocks  Id System
   ```
3. Mount the device `/dev/sdb` to the `/mnt/usb` directory.
   ```
   ONIE:/ # mount -t vfat /dev/sdb /mnt/usb
   ```
   NOTE: The following message displays if the `/mnt/usb` directory is missing: `mount: mounting /dev/sdb on /mnt/usb failed: No such file or directory.`

   NOTE: The following message displays if the USB device is not seen: `mount: mounting /dev/sdb on /mnt/usb failed: No such device or address.`

9

Before you install an OS

After powering on the Z9264F-ON switch, it goes through a power-on self-test (POST).

POST runs every time the switch is initialized and checks the hardware components to determine if the switch is fully operational before booting. After POST, the switch uses the Grub bootloader.

To select an entry, use the up and down arrow keys. Press **Enter** to select an OS or enter `e` to edit the commands before booting. Enter `c` for a command line. The selected entry runs automatically in the operating system.

Grub bootloader example

```
GNU GRUB  version 2.02~beta2+e4a1fe391

 +----------------------------------------------------+
 |*ONIE: Install OS                                   |
 | ONIE: Rescue                                       |
 | ONIE: Uninstall OS                                 |
 | ONIE: Update ONIE                                  |
 | ONIE: Embed ONIE                                   |
 | EDA-DIAG                                           |
 |                                                    |
 +----------------------------------------------------+
```

Your switch comes with ONIE installed.

NOTE: To access ONIE, use the RJ-45 or MicroUSB console port.

ONIE example

```
ONIE: Install OS
    For downloading and installing an OS from a URL
    Starts ONIE with ONIE Discovery Service
    (factory default boot)
ONIE: Rescue
    Starts ONIE without ONIE Discovery Service
    Useful for running Diagnostics manually
ONIE: Uninstall OS
    Restore to factory defaults erases any installed OS
ONIE: Update ONIE
    For downloading and updating ONIE from a URL
ONIE: Embed ONIE
    For downloading and updating ONIE from a URL and erases any installed OS
```

During the initial setup, the switch boots to ONIE Install. ONIE Install boots with ONIE Discovery to the console, `ONIE:`.

NOTE: For more information, see the *Open Networking Hardware Diagnostic Guide* at Dell Support.

NOTE: After you have securely installed and powered on the Z9264F-ON switch, to configure your switch, see your third-party ONIE-compatible OS or the Dell OS documentation.

Topics:

- ONIE service discovery

ONIE service discovery

ONIE attempts to locate the installer through several discovery methods.

To download and run an installer, the ONIE Service Discovery feature follows these steps in order and uses the first successful method found:

1. Search locally attached storage devices for one of the ONIE default installer filenames—for example, `onie self update` from the USB.
2. Query to the IPv6 link-local neighbors using HTTP for an installer.
3. Discover TFTP-based image from the DHCP server.

If none of the ONIE Service Discovery methods are successful, you can disable this using the `onie-discovery-stop` command.

You can install an operating system manually from HTTP, FTP, or TFTP using the `onie-nos-install <URL>` command.

NOTE: If you have a recovery USB plugged into your switch, you must remove it before using the `onie-nos-install` command.

The ONIE Install environment uses DHCP to assign an IP address to the management interface—eth0. If that fails, it uses the default IP address 192.168.3.10/255.255.255.0.

To display the IP address, use the `ifconfig eth0` command, as shown.

```
ONIE:/ # ifconfig eth0
eth0 Link encap:Ethernet HWaddr 90:B1:1C:F4:9C:76
 inet addr:10.11.53.33 Bcast:10.255.255.255 Mask:255.0.0.0
 inet6 addr: fe80::92b1:1cff:fef4:9c76/64 Scope:Link
 UP BROADCAST RUNNING MULTICAST MTU:1500 Metric:1
 RX packets:18 errors:0 dropped:0 overruns:0 frame:0
 TX packets:24 errors:0 dropped:0 overruns:0 carrier:0 collisions:0 txqueuelen:1000
 RX bytes:1152 (1.1 KiB) TX bytes:6864 (6.7 KiB)
 Interrupt:21 Memory:ff300000-ff320000
```

To assign an IP address to the management interface, eth0, and verify network connectivity, use the `ifconfig eth0 <ip address>` command, as shown.

```
ONIE:/ # ifconfig eth0 10.11.53.33/16 UP

Verify the network connection with ping.
ONIE:/ # ping 10.11.8.12
PING 10.11.8.12 (10.11.8.12): 56 data bytes
64 bytes from 10.11.8.12: seq=0 ttl=62 time=1.357 ms
64 bytes from 10.11.8.12: seq=1 ttl=62 time=0.577 ms
^C
```

10

Specifications

This section lists the Z9264F-ON switch specifications.

CAUTION: Operate the product at an ambient temperature not higher than 45°C (113°F).

CAUTION: Lithium Battery Caution: There is a danger of explosion if the battery is incorrectly replaced. Replace only with same or equivalent type of battery. Dispose of the batteries according to the manufacturer's instructions.

NOTE: For RoHS information, see Restricted Material Compliance.

Topics:

- Chassis physical design
- IEEE standards
- Agency compliance
- USA Federal Communications Commission FCC statement
- European Union EMC directive conformance statement
- India
- Japan VCCI compliance for class A equipment
- Korean certification of compliance
- China warning
- Safety standards and compliance agency certifications
- Electromagnetic compatibility
- Product recycling and disposal

Chassis physical design

Table 5. Chassis physical design

Parameter	Specifications
Height	3.37 inches (85.6 mm)
Width	17.4 inches (442 mm)
Depth	• Chassis: 20.0 inches (510 mm) • PSU/fan tray handle: 1.38 inches (35 mm)
Chassis weight with factory-installed components	• 34.6 lbs (2 PSUs and 4 fans) • 15.7 kg (2 PSUs and 4 fans)
Rack clearance required	• Front: 5 inches (12.7 cm) • Back: 5 inches (12.7 cm)

Table 6. Environmental parameters

Parameter	Specifications
Operating temperature	0°C to 45°C (32°F to 113°F) • -5°C to 45°C (23°F to 113°F) short term • Short term is </= 1% of operational hours per year. **NOTE:** Reduce maximum temperature by 1°C/125 meters (1°F/228 feet) above 950 meters (3,117 feet).

Table 6. Environmental parameters (continued)

Parameter	Specifications
Operating humidity	5% to 90% (RH), non-condensing
Storage temperature	–40°C to 70°C (–40°F to 158°F)
Storage humidity	5% to 90%, non-condensing
Maximum thermal output	470 W = 1603.7 BTU/Hr
Maximum operational altitude	10,000 feet (3048 meters)
Maximum non-operational altitude	39,370 feet (12,000 meters)
Shock	Dell EMC Spec SV0115

Table 7. AC power requirements

Parameter	Specifications
Power supply	100–240 VAC 50/60 Hz
Maximum current draw per switch	4.7A/3.9A at 100/120V AC 2.35A/1.95A at 200/240V AC
Maximum power capability	1104.37W (based on 4.5W QSFP28)
Typical power consumption	900W

Table 8. DC power requirements

Parameter	Specifications
Minimum/maximum input voltage range	-48V, –60V
Input power at full load	• –48V/930W, –60V/950W (without fan) • –48V/940W –60V/ 960W, with fan
Input current at full load	• –48V/19.0A –60V/ 15.6A, without fan • –48V/19.2A –60V/ 16.0A, with fan

IEEE standards

The Z9264F-ON switch complies with the following IEEE standards.

- 802.1ab (LLDP)
- 802.1ax (Layer 2)
- 802.1d, 802.1w, 802.1s, 802.1x (Mgmt/Security), 802.3x (Layer 2)
- 802.3 (1000BASE-KX)
- 802.3ba (40GbE and 100GbE ports)

Agency compliance

The Z9264F-ON switch is designed to comply with the following safety and agency requirements:

USA Federal Communications Commission FCC statement

This equipment has been tested and found to comply with the limits for a Class A digital device, pursuant to Part 15 of the FCC rules. These limits are designated to provide reasonable protection against harmful interference when the equipment is operated in a commercial environment. This equipment generates, uses, and can radiate radio frequency energy. If it is not installed and

used in accordance to the instructions, it may cause harmful interference to radio communications. Operation of this equipment in a residential area is likely to cause harmful interference, in which case users will be required to take whatever measures necessary to correct the interference at their own expense.

Properly shielded and grounded cables and connectors must be used in order to meet FCC emission limits. Dell EMC is not responsible for any radio or television interference caused by using other than recommended cables and connectors or by unauthorized changes or modifications in the equipment. Unauthorized changes or modification could void the user's authority to operate the equipment.

This device complies with Part 15 of the FCC Rules. Operation is subject to the following two conditions: (1) this device may not cause harmful interference, and (2) this device must accept any interference received, including interference that may cause undesired operation.

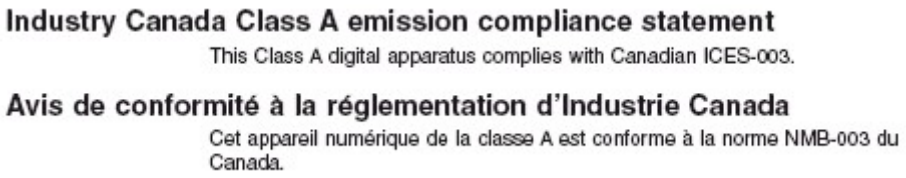

Figure 20. Canadian Department of Communication Statement

European Union EMC directive conformance statement

This product is in conformity with the protection requirements of EU Council Directive 2004/108/EC on the approximation of the laws of the Member States relating to electromagnetic compatibility. Dell EMC can not accept responsibility for any failure to satisfy the protection requirements resulting from a non-recommended modification of this product, including the fitting of non-Dell EMC option cards.

This product has been tested and found to comply with the limits for Class A Information Technology Equipment according to CISPR 32/CISPR34 and EN55032 / EN55034. The limits for Class A equipment were derived for commercial and industrial environments to provide reasonable protection against interference with licensed communication equipment.

NOTE: This is a Class A product. In a domestic environment, this device may cause radio interference, in which case, you may be required to take adequate measures.

European Community Contact

Dell EMC, EMEA - Central

Dahlienweg 19

66265 Heusweiler

Germany

Tel: +49 172 6802630

Email: EMEA Central Sales

India

This product conforms to the relevant Essential Requirements of TEC, Department of Telecommunications, Ministry of Communications, Govt of India, New Delhi-110001.

Japan VCCI compliance for class A equipment

この装置は、情報処理装置等電波障害自主規制協議会（ＶＣＣＩ）の基準に基づくクラスＡ情報技術装置です。この装置を家庭環境で使用すると電波妨害を引き起こすことがあります。この場合には使用者が適切な対策を講ずるよう要求されることがあります。

Figure 21. Japan: VCCI compliance for class A equipment

This is Class A product based on the standard of the Voluntary Control Council For Interference by Information Technology Equipment (VCCI). If this equipment is used in a domestic environment, radio disturbance may arise. When such trouble occurs, the user may be required to take corrective actions.

NOTE: Use the AC power cords with Dell EMC equipment only. Do not use Dell EMC AC power cords with any unauthorized hardware.

本製品に同梱いたしております電源コードセットは、本製品専用です。本電源コードセットは、本製品以外の製品ならびに他の用途でご使用いただくことは出来ません。製品本体には同梱された電源コードセットを使用し、他製品の電源コードセットを使用しないで下さい。

Figure 22. Japan: warning label

Korean certification of compliance

A급 기기 (업무용 방송통신기자재)	이 기기는 업무용(A급) 전자파적합기기로서 판매자 또는 사용자는 이 점을 주의하시기 바라며, 가정외의 지역에서 사용하는 것을 목적으로 합니다.

Figure 23. Korean certification of compliance

	[equipment type]
품명(Product Name)	Ethernet Switch
모델명(Model)	[model number]
신청인(Applicant)	Dell Technologies
제조자(Manufacturer)	[Manufacturer]
제조년월(Manufacturing Date)	[date]
제조국(Country of Origin)	China

Figure 24. Korean package label

China warning

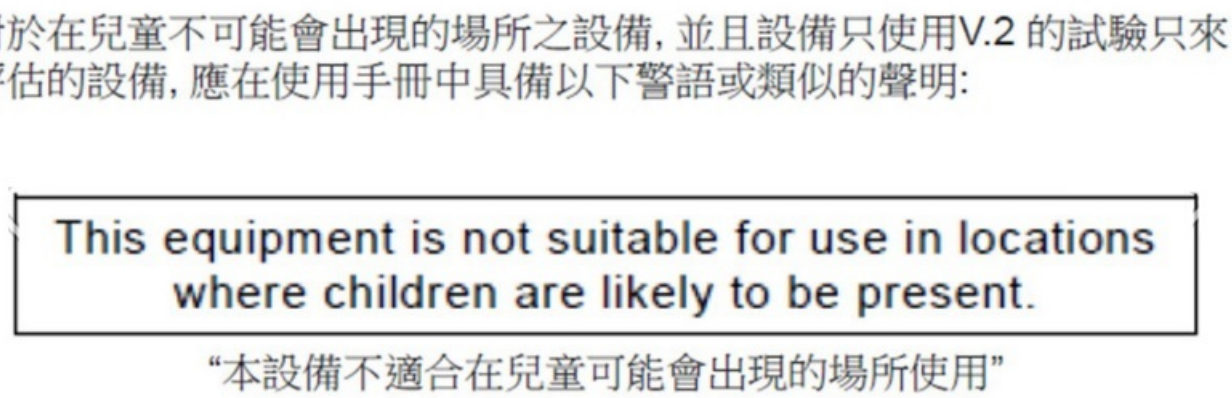

Figure 25. China warning

Safety standards and compliance agency certifications

- CUS UL 60950-1, 2nd Edition
  - Meets or exceeds Hi Pot and Ground Continuity testing per UL 60950-1.
- CSA 60950-1-03, 2nd Edition
- EN 60950-1, 2nd Edition
- EN 60825-1, 1st Edition
- EN 60825-1 Safety of Laser Products—Part 1: Equipment Classification Requirements and User’s Guide
- EN 60825-2 Safety of Laser Products—Part 2: Safety of Optical Fibre Communication Systems
- FDA Regulation 21CFR 1040.10 and 1040.11
- IEC 60950-1, 2nd Ed, including all National Deviations and Group Differences
- IEC 62368-1

Electromagnetic compatibility

Emissions

- International: CISPR32: Class A
- Australia/New Zealand: AS/NZS CISPR 32: Class A
- Canada: ICES-003, Issue-4, Class A
- Europe: EN55032 2006 CISPR 32: Class A
- EN55032
- Japan: VCCI V-3/2011.04, Class A
- Korea: KN32, Class A
- Taiwan: CNS13438, Class A
- USA: FCC CFR47 Part 15, Subpart B, Class A

Immunity

- EN 300 386 v2.1.1 (2016-07) EMC for Network Equipment

- EN 55024 + A1 + A2
- EN 61000-3-2 Harmonic Current Emissions
- EN 61000-3-3 Voltage Fluctuations and Flicker
- EN 61000-4-2 ESD
- EN 61000-4-3 Radiated Immunity
- EN 61000-4-4 EFT
- EN 61000-4-5 Surge
- EN 61000-4-6 Low Frequency Conducted Immunity
- EN 61000-6-1
- EN 61000-4-11 Voltage Dips/Interruptions

Product recycling and disposal

You must recycle or discard this switch according to applicable local and national regulations. Dell EMC encourages owners of information technology (IT) equipment to responsibly recycle their equipment when it is no longer needed. Dell EMC offers a variety of product return programs and services in several countries to assist equipment owners in recycling their IT products.

Waste electrical and electronic equipment (WEEE) directive for recovery, recycle and reuse of IT and telecommunications products

Dell EMC switches are labeled in accordance with European Directive 2002/96/EC concerning waste electrical and electronic equipment (WEEE). The Directive determines the framework for the return and recycling of used appliances as applicable throughout the European Union. This label is applied to various products to indicate that the product is not to be thrown away, but rather reclaimed upon end of life per this Directive.



Figure 26. The European WEEE symbol

In accordance with the European WEEE Directive, electrical and electronic equipment (EEE) is to be collected separately and to be reused, recycled, or recovered at end of life. Users of EEE with the WEEE marking per Annex IV of the WEEE Directive, as shown above, must not dispose of end of life EEE as unsorted municipal waste, but use the collection framework available to customers for the return, recycling and recovery of WEEE. Customer participation is important to minimize any potential effects of EEE on the environment and human health due to the potential presence of hazardous substances in EEE.

Dell EMC products, which fall within the scope of the WEEE, are labeled with the crossed-out wheelie-bin symbol, as shown above, as required by WEEE.

For information on Dell EMC product recycling offerings, see the WEEE Recycling instructions on Support. For more information, contact the Dell EMC Technical Assistance Center.

11

Dell support

The Dell support site provides documents and tools to help you use Dell equipment and mitigate network outages. Through the support site you can obtain technical information, access software upgrades and patches, download available management software, and manage your open cases. The Dell support site provides integrated, secure access to these services.

To access the Dell support site, go to Dell Support. To display information in your language, scroll down to the bottom of the web page and select your country or region from the drop-down menu.

- To obtain product-specific information, enter the 7-character Service Tag or 11-digit express service code of your switch, which is found on the pull-out tag, also known as a luggage tag, and click **Submit**.
- To receive more technical support, click **Contact Us**. On the Contact Information web page, click **Technical Support**.

To access switch documentation, go to Dell Manuals and enter your switch type.

To search for drivers and downloads, go to the **Drivers & Downloads** tab for your switch.

To participate in Dell community blogs and forums, go to Dell Community.