UP3221Q Outline Dimensions

Unit: mm(inch)

Dimension: Norminal
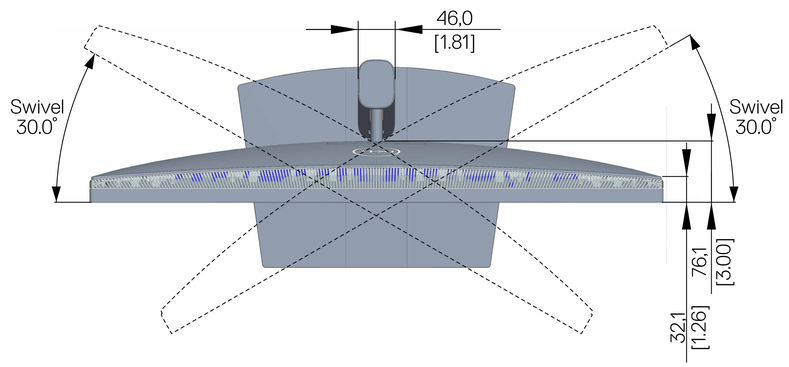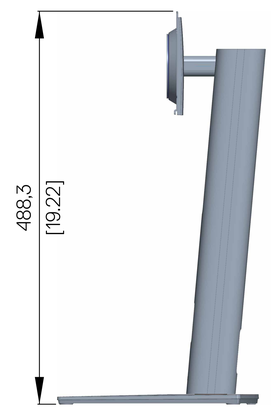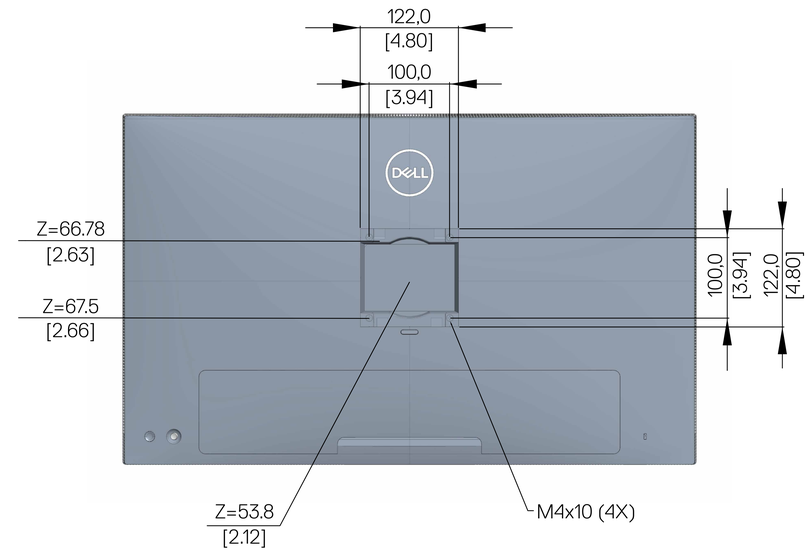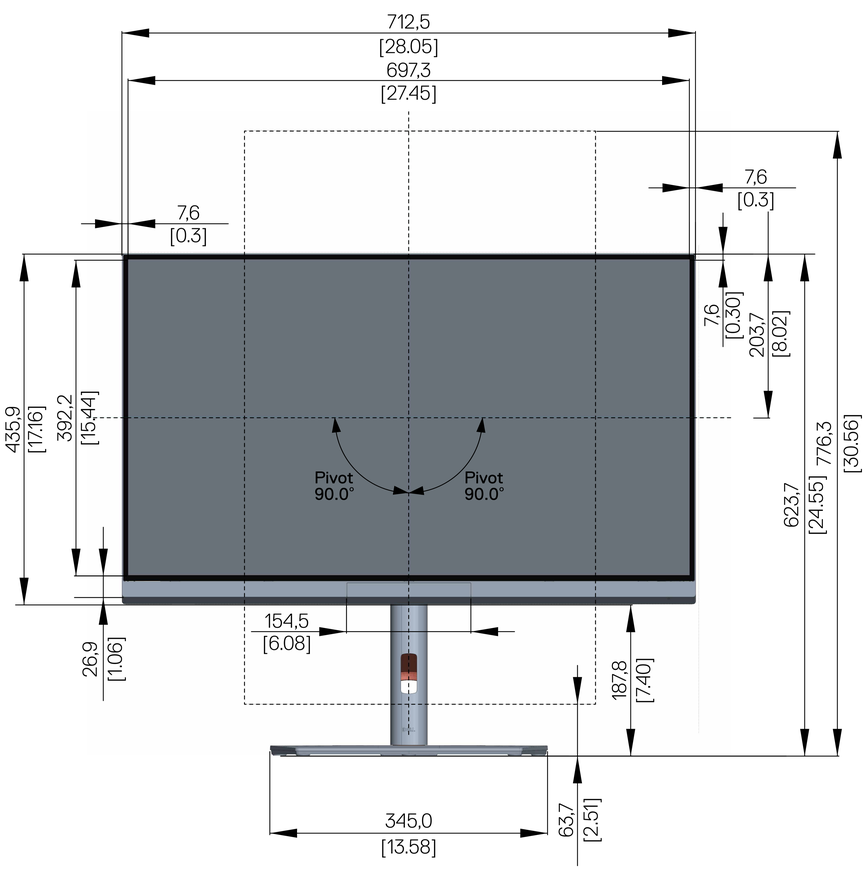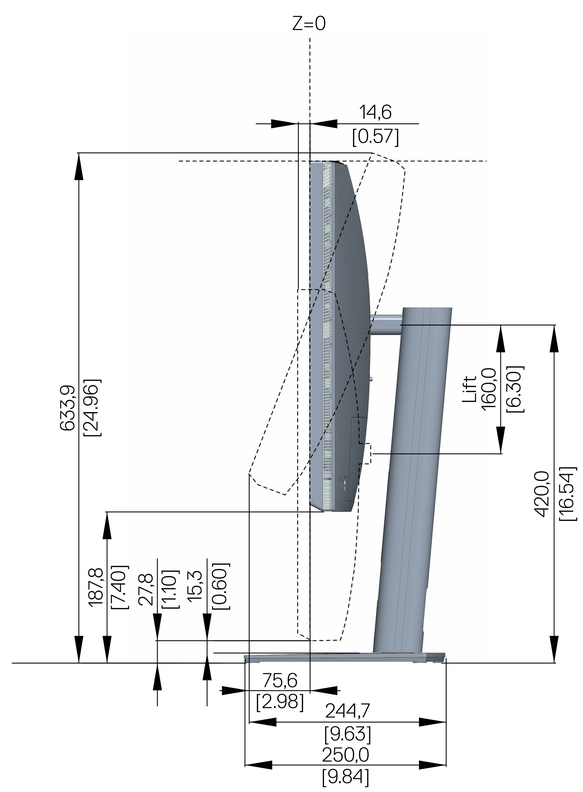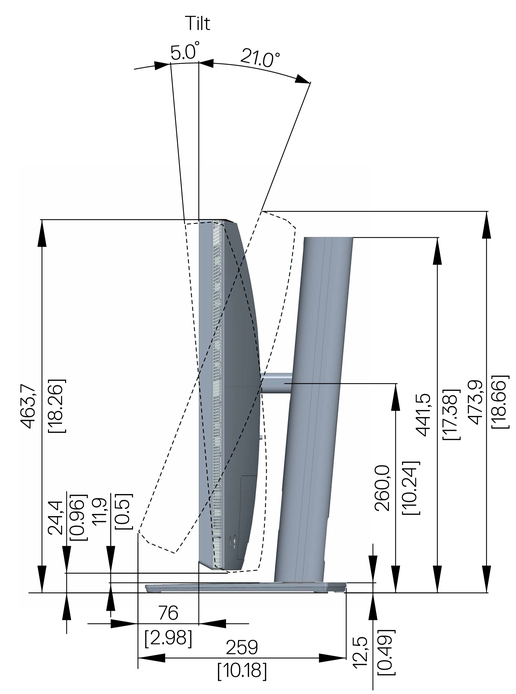
Drawing: Not to Scale