U3421WE Outline Dimension
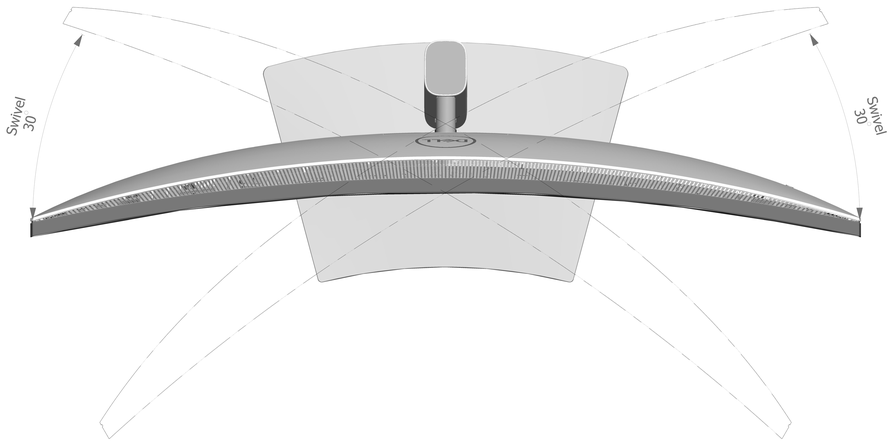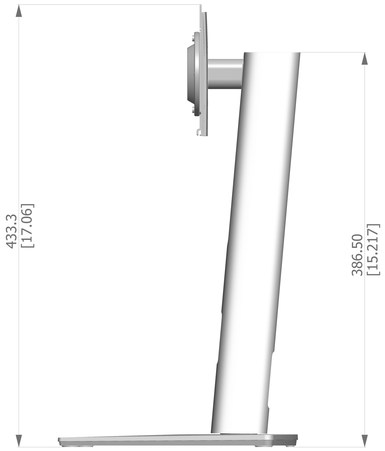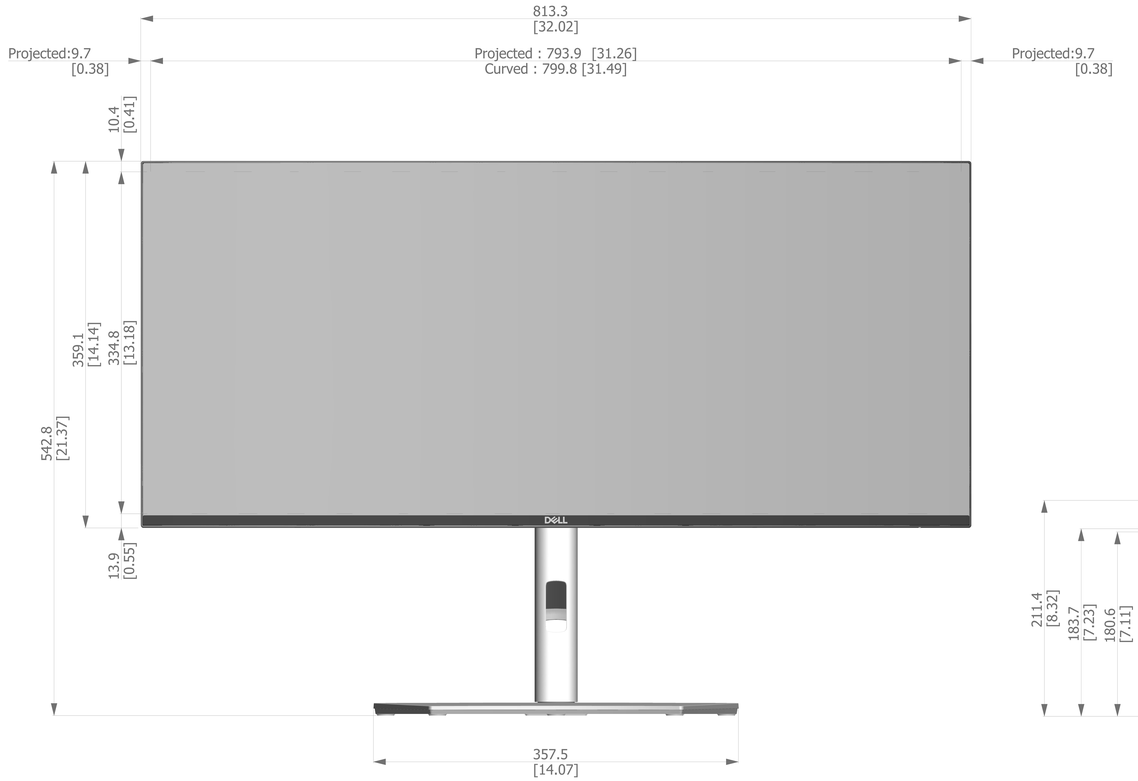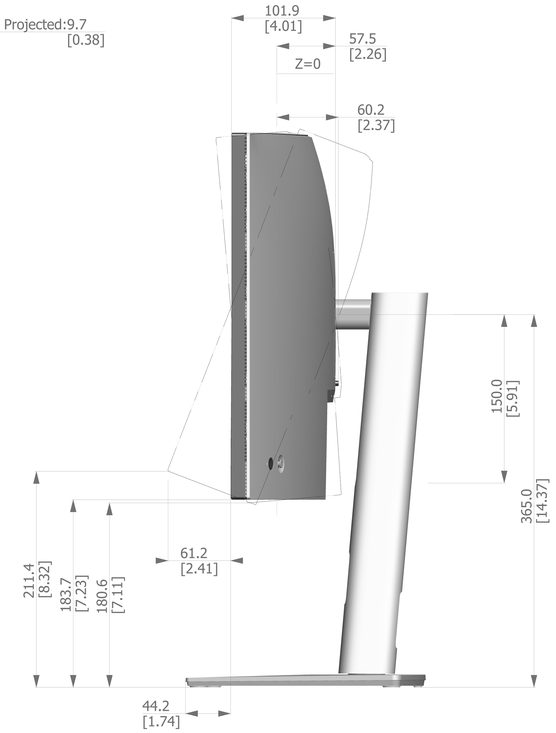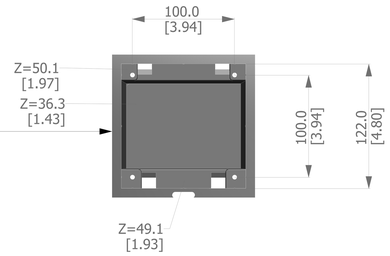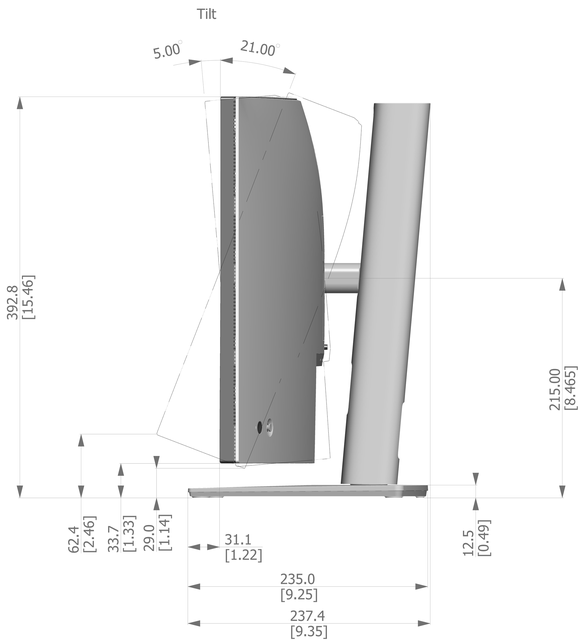
Unit: mm [inch]
Dimension: Nominal
Drawing: Not to Scale