Dell UltraSharp U2421E

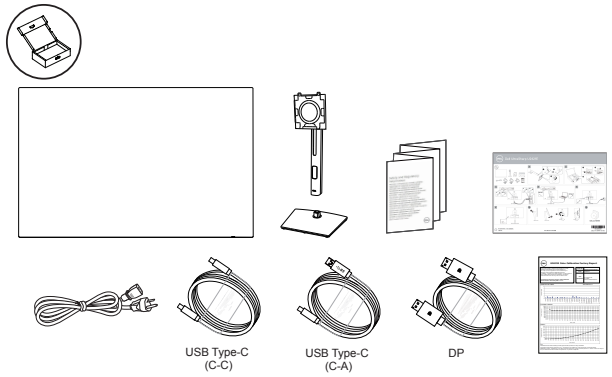

1

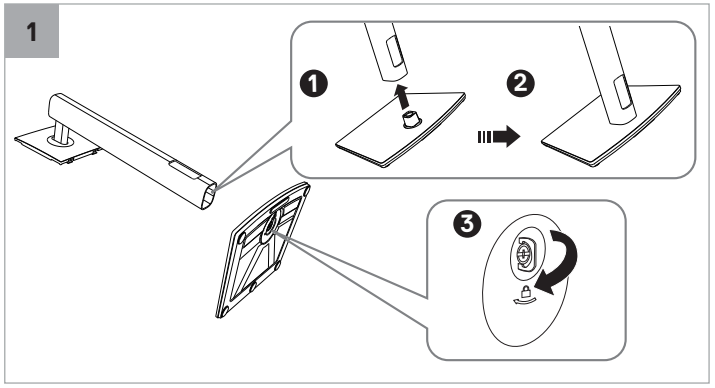

2

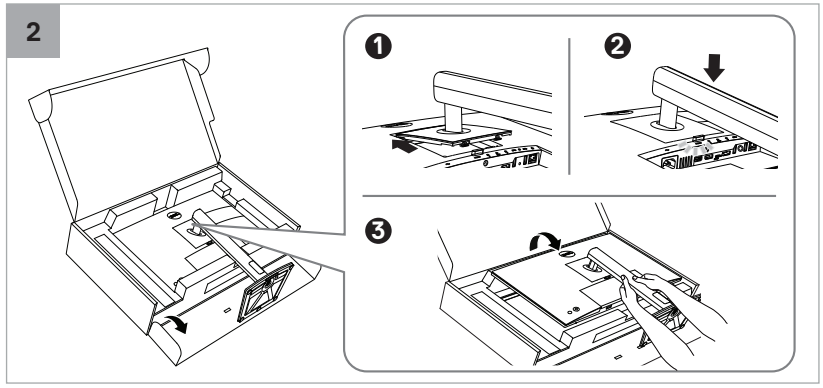

3

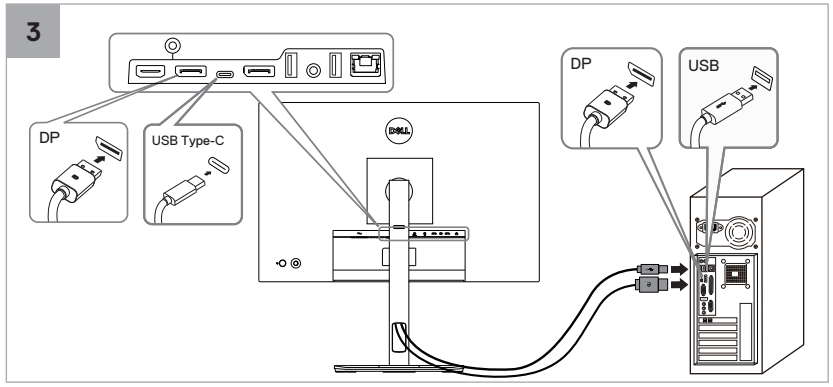

4

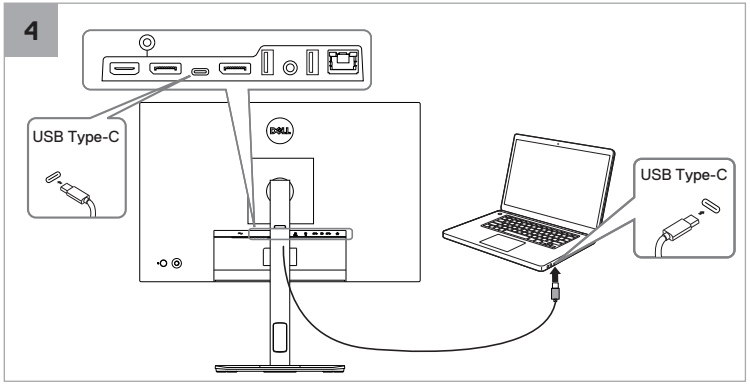

5

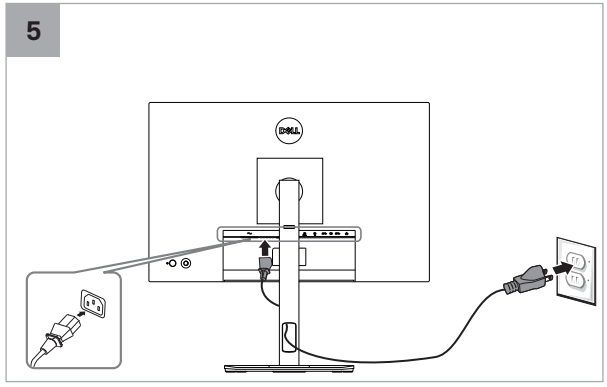

6

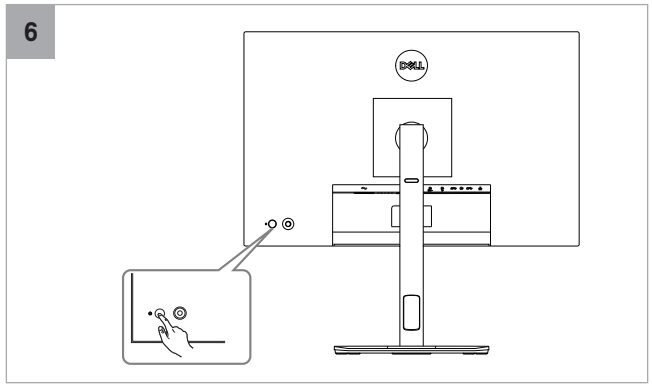

i

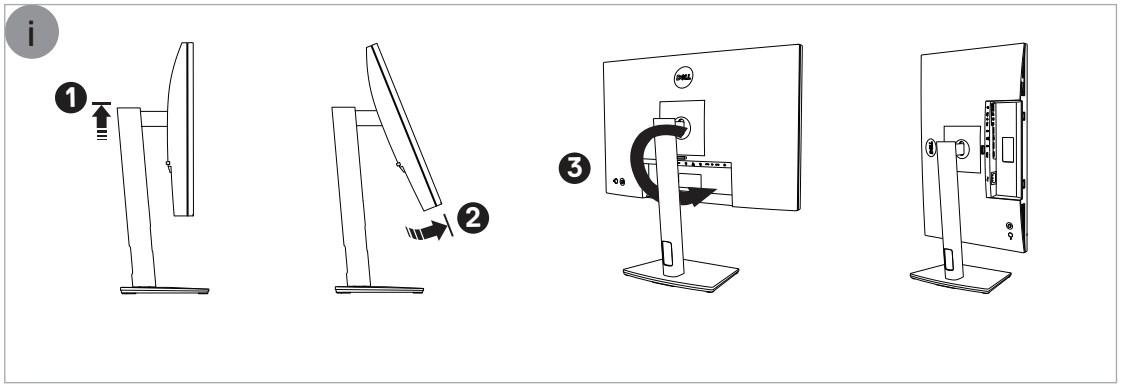

i

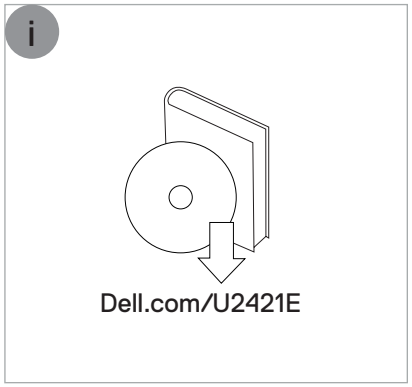

© 2020 Dell Inc. or its subsidiaries.

2020-10

www.dell.com/contactdell

746.A3801.0001

(DELL P/N: P24WV rev.A00)