S2422HG Outline Dimension
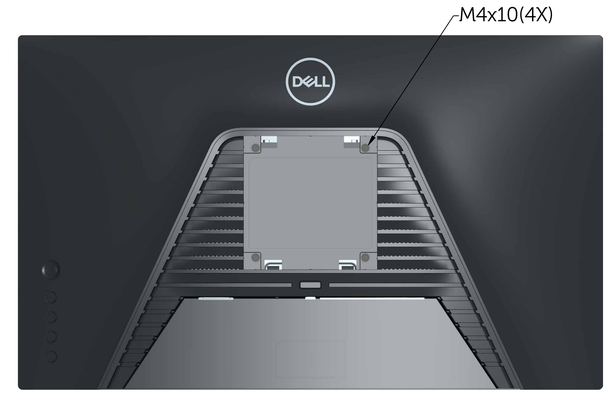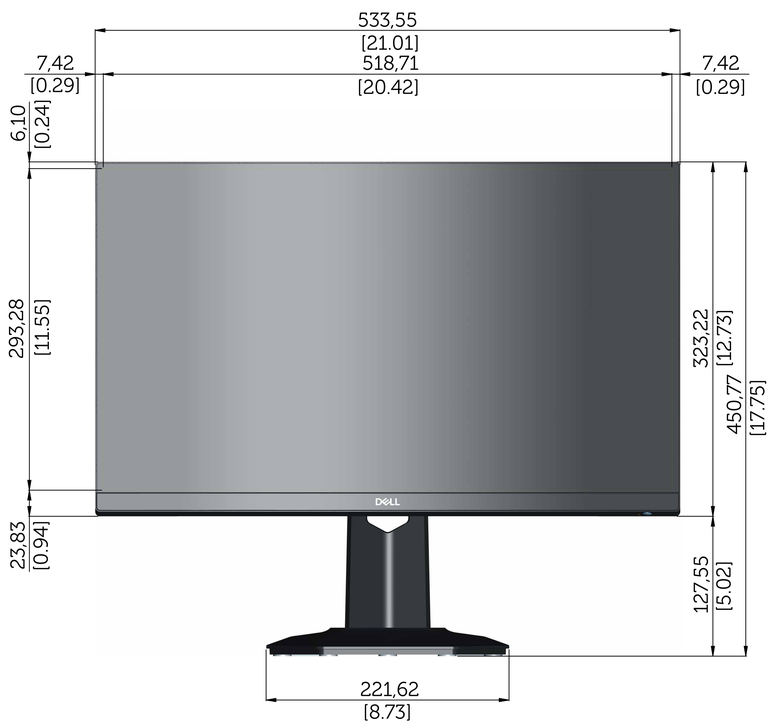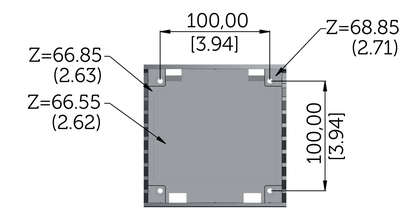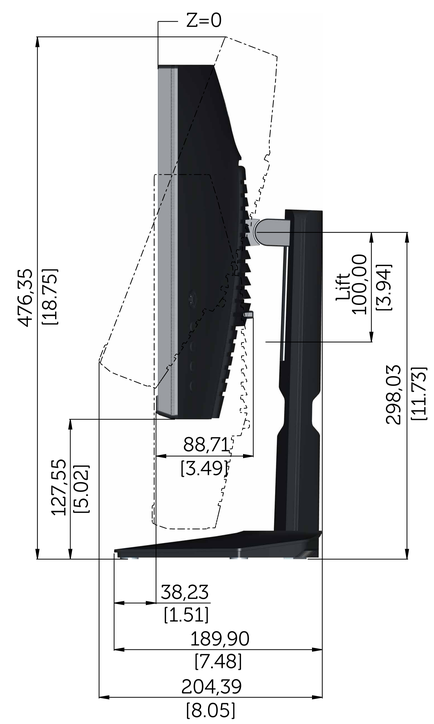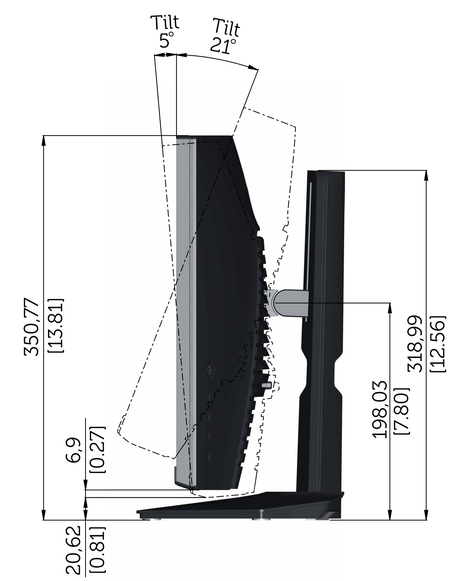
Unit: mm(inch)
Dimension: Nominal
Drawing: Not to scale